COLOR TELEVISION RECEIVER

Chassis : K51A

Model: TXJ2060, TXJ2066, TXJ2067, TXJ2554, TXJ2566, TXJ2567, TXJ2754, TXJ2766, TXJ2767, TXJ2768, TXJ2879

SERVICE Manual

COLOR TELEVISION RECEIVER

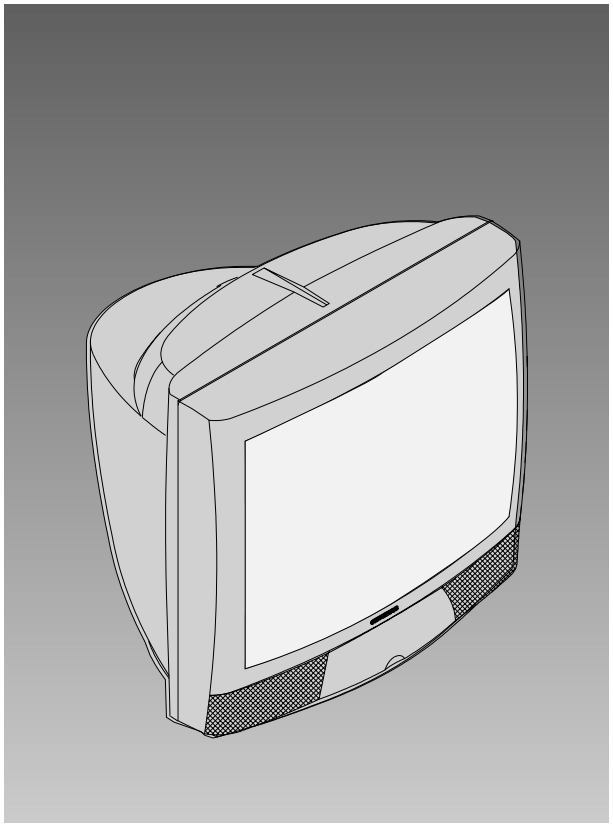

CONTENTS

1. Precautions
2. Specifications and IC Data
3. Alignment and Adjustments
4. Troubleshooting
5. Exploded Views and Parts List
6. Electric Parts List
7. Block Diagrams
8. Schematic Diagrams

Downloaded from www.Manualslib.com manuals search engine

SAMSUNG

ELECTRONICS

© Samsung Electronics Co., Ltd. **APR.1999**
Printed in Korea
3K51A-2001

Downloaded from www.Manualslib.com manuals search engine

1. Precautions

Follow these safety, servicing and ESD precautions to prevent damage and protect against potential hazards such as electrical shock and X-rays.

1-1 Safety Precautions

1. Be sure that all of the built-in protective devices are replaced. Restore any missing protective shields.

2. When reinstalling the chassis and its assemblies, be sure to restore all protective devices, including: nonmetallic control knobs and compartment covers.

3. Make sure that there are no cabinet openings through which people—particularly children—might insert fingers and contact dangerous voltages. Such openings include the spacing between the picture tube and the cabinet mask, excessively wide cabinet ventilation slots, and improperly fitted back covers.

   If the measured resistance is less than 1.0 megohm or greater than 5.2 megohms, an abnormality exists that must be corrected before the unit is returned to the customer.

4. Leakage Current Hot Check (Figure 1-1):
   Warning: Do not use an isolation transformer during this test. Use a leakage-current tester or a metering system that complies with American National Standards Institute (ANIS C101.1, Leakage Current for Appliances), and Underwriters Laboratories (UL Publication UL1410, 59.7).

5. With the unit completely reassembled, plug the AC line cord directly into the power outlet. With the unit's AC switch first in the ON position and then OFF, measure the current between a known earth ground (metal water pipe, conduit, etc.) and all exposed metal parts, including: antennas, handle brackets, metal cabinets, screwheads and control shafts. The current measured should not exceed 0.5 milliamp. Reverse the power-plug prongs in the AC outlet and repeat the test.

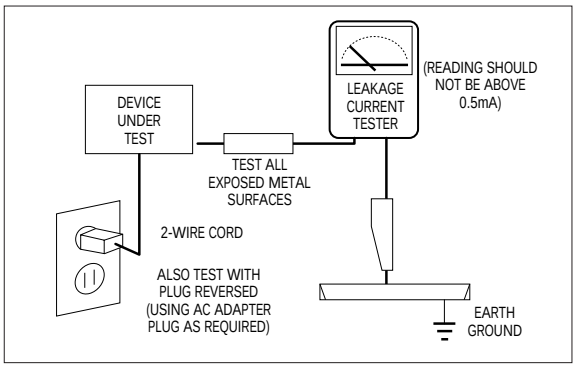

Fig. 1-1 AC Leakage Test

6. Antenna Cold Check:
   With the unit's AC plug disconnected from the AC source, connect an electrical jumper across the two AC prongs. Connect one lead of the ohmmeter to an AC prong. Connect the other lead to the coaxial connector.

7. X-ray Limits:
   The picture tube is especially designed to prohibit X-ray emissions. To ensure continued X-ray protection, replace the picture tube only with one that is the same type as the original. Carefully reinstall the picture tube shields and mounting hardware; these also provide X-ray protection.

8. High Voltage Limits:
   High voltage must be measured each time servicing is done on the B+, horizontal deflection or high voltage circuits. Correct operation of the X-ray protection circuits must be
   reconfirmed whenever they are serviced.
   (X-ray protection circuits also may be called "horizontal disable" or "hold-down".)

   Heed the high voltage limits. These include the X–ray Protection Specifications Label, and the Product Safety and X-ray Warning Note on the service data schematic.

Downloaded from www.Manualslib.com manuals search engine

1-1 Safety Precautions (Continued)

9. High voltage is maintained within specified limits by close-tolerance, safety-related components and adjustments. If the high voltage exceeds the specified limits, check each of the special components.

10. Design Alteration Warning:
Never alter or add to the mechanical or electrical design of this unit. Example: Do not add auxiliary audio or video connectors. Such alterations might create a safety hazard. Also, any design changes or additions will void the manufacturer's warranty.

11. Hot Chassis Warning:
Some TV receiver chassis are electrically connected directly to one conductor of the AC power cord. If an isolation transformer is not used, these units may be safely serviced only if the AC power plug is inserted so that the chassis is connected to the ground side of the AC source.

    To confirm that the AC power plug is inserted correctly, do the following: Using an AC voltmeter, measure the voltage between the chassis and a known earth ground. If the reading is greater than 1.0V, remove the AC power plug, reverse its polarity and reinsert. Re-measure the voltage between the chassis and ground.

12. Some TV chassis are designed to operate with 85 volts AC between chassis and ground, regardless of the AC plug polarity. These units can be safely serviced only if an isolation transformer inserted between the receiver and the power source.

13. Some TV chassis have a secondary ground system in addition to the main chassis ground. This secondary ground system is not isolated from the AC power line. The two ground systems are electrically separated by insulating material that must not be defeated or altered.

14. Components, parts and wiring that appear to have overheated or that are otherwise damaged should be replaced with parts that meet the original specifications. Always determine the cause of damage or overheating, and correct any potential hazards.

15. Observe the original lead dress, especially near the following areas: Antenna wiring, sharp edges, and especially the AC and high voltage power supplies. Always inspect for pinched, out-of-place, or frayed wiring. Do not change the spacing between components and the printed circuit board. Check the AC power cord for damage. Make sure that leads and components do not touch thermally hot parts.

16. Picture Tube Implosion Warning:
The picture tube in this receiver employs "integral implosion" protection. To ensure continued implosion protection, make sure that the replacement picture tube is the same as the original.

17. Do not remove, install or handle the picture tube without first putting on shatterproof goggles equipped with side shields. Never handle the picture tube by its neck. Some "in-line" picture tubes are equipped with a permanently attached deflection yoke; do not try to remove such "permanently attached" yokes from the picture tube.

18. Product Safety Notice:
Some electrical and mechanical parts have special safety-related characteristics which might not be obvious from visual inspection. These safety features and the protection they give might be lost if the replacement component differs from the original—even if the replacement is rated for higher voltage, wattage, etc.

    Components that are critical for safety are indicated in the circuit diagram by shading, (⚠) or (⚠).
    Use replacement components that have the same ratings, especially for flame resistance and dielectric strength specifications.
    A replacement part that does not have the same safety characteristics as the original might create shock, fire or other hazards.

Downloaded from www.Manualslib.com manuals search engine

1-2 Servicing Precautions

Warning 1 : First read the "Safety Precautions" section of this manual. If some unforeseen circumstance creates a conflict between the servicing and safety precautions, always follow the safety precautions.

Warning 2 : An electrolytic capacitor installed with the wrong polarity might explode.

1. Servicing precautions are printed on the cabinet. Follow them.

2. Always unplug the unit's AC power cord from the AC power source before attempting to: (a) Remove or reinstall any component or assembly, (b) Disconnect an electrical plug or connector, (c) Connect a test component in parallel with an electrolytic capacitor.

3. Some components are raised above the printed circuit board for safety. An insulation tube or tape is sometimes used. The internal wiring is sometimes clamped to prevent contact with thermally hot components. Reinstall all such elements to their original position.

4. After servicing, always check that the screws, components and wiring have been correctly reinstalled. Make sure that the portion around the serviced part has not been damaged.

5. Check the insulation between the blades of the AC plug and accessible conductive parts (examples: metal panels, input terminals and earphone jacks).

6. Insulation Checking Procedure: Disconnect the power cord from the AC source and turn the power switch ON. Connect an insulation resistance meter (500V) to the blades of the AC plug.

   The insulation resistance between each blade of the AC plug and accessible conductive parts (see above) should be greater than 1 megohm.

7. Never defeat any of the B+ voltage interlocks. Do not apply AC power to the unit (or any of its assemblies) unless all solid-state heat sinks are correctly installed.

8. Always connect a test instrument's ground lead to the instrument chassis ground before connecting the positive lead; always remove the instrument's ground lead last.

Downloaded from www.Manualslib.com manuals search engine

1-3 Precautions for Electrostatically Sensitive Devices (ESDs)

1. Some semiconductor ("solid state") devices are easily damaged by static electricity. Such components are called Electrostatically Sensitive Devices (ESDs); examples include integrated circuits and some field-effect transistors. The following techniques will reduce the occurrence of component damage caused by static electricity.

2. Immediately before handling any semicon ductor components or assemblies, drain the electrostatic charge from your body by touching a known earth ground. Alternatively, wear a discharging wrist-strap device. (Be sure to remove it prior to applying power—this is an electric shock precaution.)

3. After removing an ESD-equipped assembly, place it on a conductive surface such as aluminum foil to prevent accumulation of electrostatic charge.

4. Do not use freon-propelled chemicals. These can generate electrical charges that damage ESDs.

5. Use only a grounded-tip soldering iron when soldering or unsoldering ESDs.

6. Use only an anti-static solder removal device. Many solder removal devices are not rated as "anti-static"; these can accumulate sufficient electrical charge to damage ESDs.

7. Do not remove a replacement ESD from its protective package until you are ready to install it. Most replacement ESDs are packaged with leads that are electrically shorted together by conductive foam, aluminum foil or other conductive materials.

8. Immediately before removing the protective material from the leads of a replacement ESD, touch the protective material to the chassis or circuit assembly into which the device will be installed.

9. Minimize body motions when handling unpackaged replacement ESDs. Motions such as brushing clothes together, or lifting a foot from a carpeted floor can generate enough static electricity to damage an ESD.

Downloaded from www.Manualslib.com manuals search engine

2. Specifications and IC Data

2-1 Specifications

MODEL	CT-5072BWZ CT-5072BPZ	CT-565BZ / 566BWZ CT-567BWZ / 568BPZ CT-225BZ / 228BWZ CT-22B6PZ	CT-25D4WZ	CT-29D4WZ	CT-765DWZ CT-766DWZ CT-30D6PZ CT-30A9PZ
VOLTAGE	AC100-240V (Mexico: AC127V±10%)				
POWER CONSUMPTION	85 WATTS		110 WATTS	120 WATTS	120 WATTS
POWER FREQUENCY	50/60Hz (Mexico: 60Hz)				
CHANNELS RECEIVED	VHF; 2~13, UHF; 14~69, CATV; 1,14~125				

MODEL	TXJ2048/2060 TXJ2066/2067	TXJ2554/2566 TXJ2567	TXJ2754/2766 TXJ2767/2768	TXJ2879
VOLTAGE	AC120V			
POWER CONSUMPTION	85 WATTS	110 WATTS	120 WATTS	130 WATTS
POWER FREQUENCY	60Hz			
CHANNELS RECEIVED	VHF; 2~13, UHF; 14~69, CATV; 1,14~125			

MODEL	CN-565BWZ CN-566BWZ	CN-25D4WZ CN-663AWZ	CN-29D4WZ CN-7202WZ CN-765DWZ
VOLTAGE	AC 100-240V (Argentina: AC 220V)		
POWER CONSUMPTION	85 WATTS	110 WATTS	120 WATTS
POWER FREQUENCY	50/60 Hz (Argentina: 50 Hz)		
CHANNELS RECEIVED	VHF: 2~13, UHF: 14~69, CATV: 1,14~125		

Downloaded from www.Manualslib.com manuals search engine

2-2 IC Line Up

Table 2 - 1 IC Line - Up				
Loc No	No	Specification	Description	Remarks
SF101	1	M3951M	SAW FILTER (VIF)	
SF102	2	M9260M	SAW FILTER (SIF)	
IC201	3	TDA8377	ONECHIP TV PROCESSOR	CT566BV/CT567BW/CT568BW/CT766DW
		TDA8373	ONECHIP TV PROCESSOR	CT633BW/CT683BW
		TDA8375	ONECHIP TV PROCESSOR	CN565BW/CN25D4W/CN663A/CN765DW
IC202	4	LA7510	AUDIO IF AMP/4.5M DETECT	
IC301	5	LA7845	VERTICAL AMP IC	
IC603	6	TDA7056B	SOUND AMP IC	1.5W x 2 (MONO)
		TDA7266S		3W x 2 (MONO)
				STEREO MODEL
IC701	7	TDA7449	VOLUME CONTROL IC	
IC801	8	KA3S1265R	POWER IC	CT633BW/CT683BW/CT766DW
				CT566BV/CT566BW/CT567BW/CT568BW
IC802	9	KA7630	MULTI REGULATOR IC	
IC901	10	SZM368ET	MICOM	
IC902	11	XL24C08P	EEPROM	
ICD01	12	CXA2104S	MTS IC	STEREO MODEL ONLY

Downloaded from www.Manualslib.com manuals search engine

2-3 Semiconductor Base Diagrams

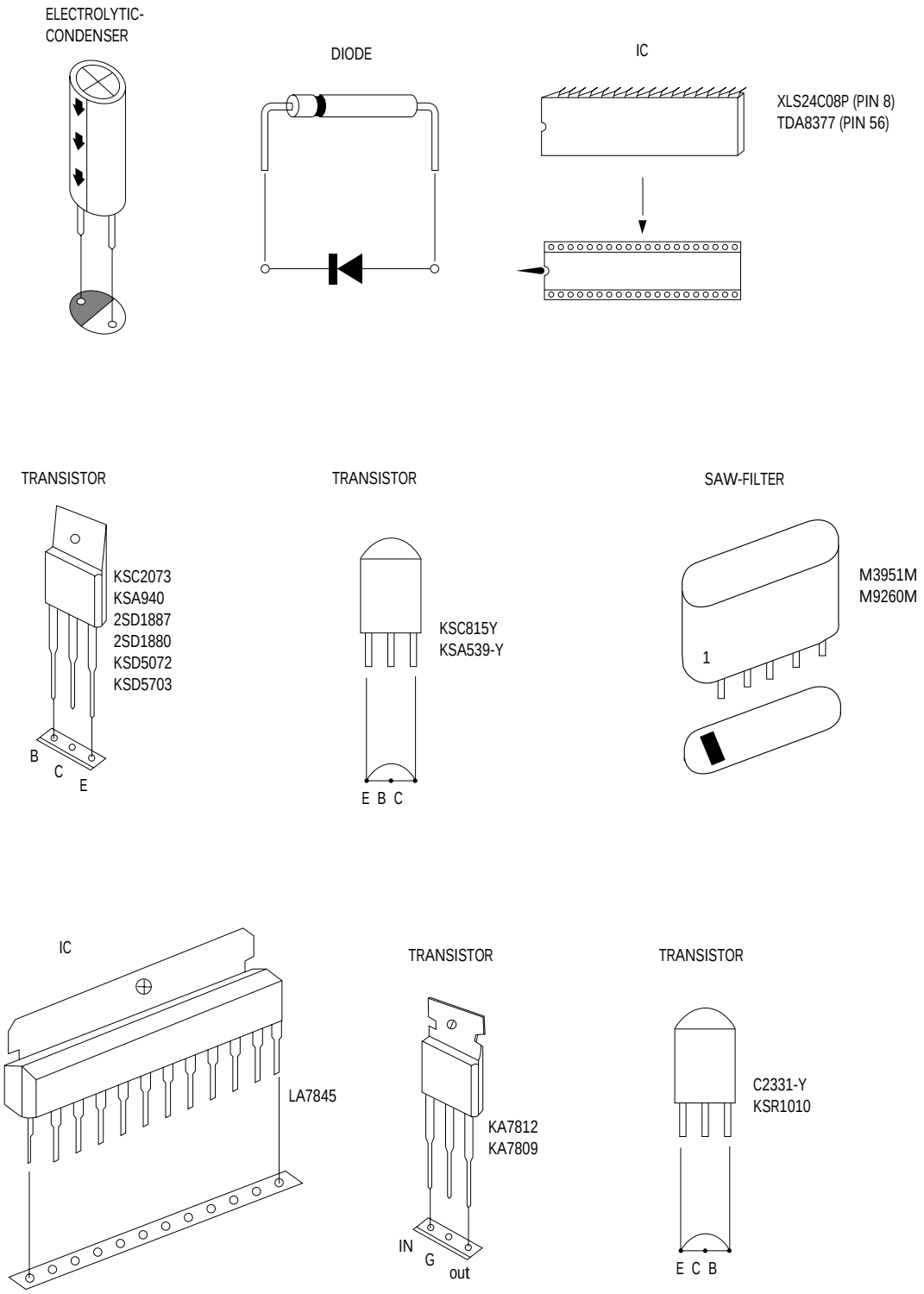

Fig. 2-1 Semiconductor Base Diagrams

Downloaded from www.Manualslib.com manuals search engine

2-4 One Chip TV-processor

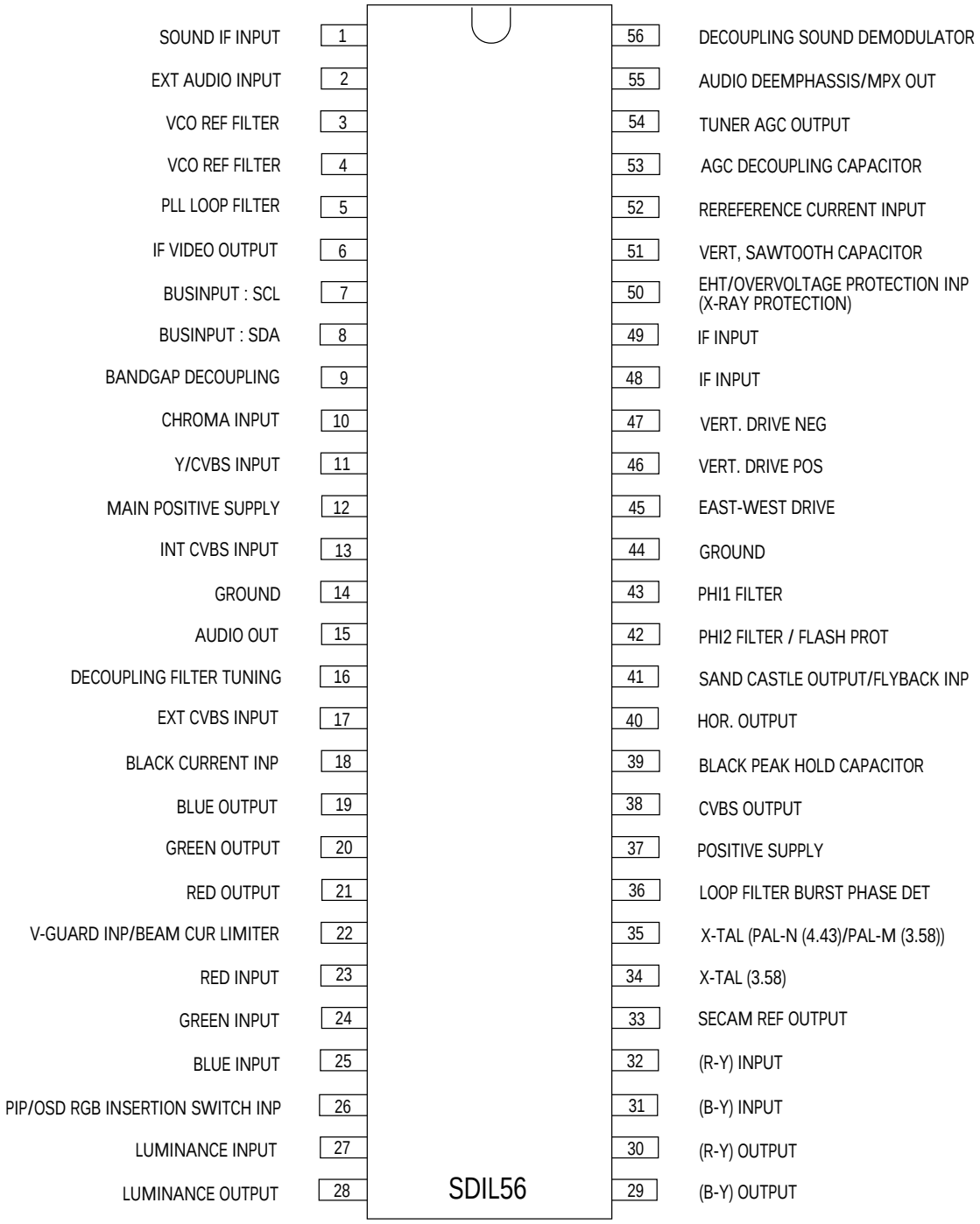

Fig. 2-2 SDIL56

CVBS : Composite Video Blanking Signal

Downloaded from www.Manualslib.com manuals search engine

3. Alignment and Adjustments

3-1 Preadjustment

1. Since there are no VRs in the K51A chassis, all adjustments after parts replacement must be done in the Service Mode.

2. The Factory Mode adjustments are necessary when either the EEPROM (IC902) or the CRT is replaced.

3. Do not tamper with the " Adjustment" screen of the Factory Mode menu. This screen is intended only for factory use.

4. WHEN EEPROM (IC902) IS REPLACED

(1) When IC902 is replaced, all adjustment data revert to their initial values. It is necessary to re-program this data.

(2) After IC902 is replaced, warm up the TV for 10 seconds.

Make the following adjustments AFTER setting up purity and convergence:

White Balance
Sub-Brightness
Vertical Center
Vertical Size
Horizontal Size (No use in 21" and 25" models)

3-2 Factory ("SERVICE") Mode

1. The set must be in Factory ("Service") Mode.
Selection sequence:
STAND-BY → MUTE → 1 →8 → 2 → POWER ON

2. The " FACTORY MODE" message will be displayed. The Factory Mode has four components : Adjustment, MPX, PIP, Option Byte and Factory Reset.

3. Access the Adjustment Mode by pressing the "VOLUME" keys (▶,◀)
The adjustment parameters are listed in the accompanying table.
Select them by pressing the CHANNEL keys (▲,▼).

4. After completing the Factory Mode adjustments, turn the power switch OFF.

Downloaded from www.Manualslib.com manuals search engine

3-2-1 Adjustment

1. Selection sequence :
   STAND-BY → MUTE → 1 → 8 → 2 → POWER ON

2. Example : Sub-bright Adjustment

SZM368ET1 (R4027)

FACTORY

Adjustment
Mpx
Pattern
Option
Reset

↓ Press VOL ▶

AGC	15		VS	32
VCO	62		VA	27
SBT	7		HS	46
SCT	11		EWA	52
SCR	8		EWP	31
STT	8		EWC	32
RG	32		EWT	31
GG	32		MAT	off
BG	32		PLA	6
SCO	20			
VSL	26			

↓ Press CH ▼

AGC	15		VS	32
VCO	62		VA	27
SBT	7		HS	46
SCT	11		EWA	52
SCR	8		EWP	31
STT	8		EWC	32
RG	32		EWT	31
GG	32		MAT	off
BG	32		PLA	6
SCO	20			
VSL	26			

↓ Press VOL ◀ or ▶

SBT	3

↓

POWER OFF

SZM368ET2 (R4127)

SERVICE

Adjustment
MTS
PIP
Option
Reset

↓ Press VOL ▶

AGC	15		VSLN	30		VSLP 30
VCO	62		VSN	32		VSP 32
SBT	7		VAN	32		VAP 32
SCT	11		HSN	45		HSP 39
SCR	8		EWAN	45		EWAP 46
STT	8		EWPN	33		EWPP 33
RG	32		EWCN	32		EWCP 32
GG	32		EWTN	38		EWPT 38
BG	32					
SCO	20					
PLA	5					

↓ Press CH ▼

AGC	15		VSLN	30		VSLP 30
VCO	62		VSN	32		VSP 32
SBT	7		VAN	32		VAP 32
SCT	11		HSN	45		HSP 39
SCR	8		EWAN	45		EWAP 46
STT	8		EWPN	33		EWPP 33
RG	32		EWCN	32		EWCP 32
GG	32		EWTN	38		EWPT 38
BG	32					
SCO	20					
PLA	5					

↓ Press VOL ◀ or ▶

SBT	3

↓

POWER OFF

Downloaded from www.Manualslib.com manuals search engine

MEMORY SPECIFICATION

Table 3 - 1 Memory Specification

FUNCTION	No	MODE (OSD)	RANGE	28B2	29D4WZ	225BZ	228BWX	25D4WZ	565BZ	566BWZ	765DWZ
A D J U S T M E N T	1	AGC	63	8	8	8	8	8	8	8	8
	2	VCO	127	63	63	63	63	63	63	63	63
	3	SBT	15	2	2	2	2	2	2	2	2
	4	SCT	13	7	7	7	7	7	7	7	7
	5	SCR	13	0	0	0	0	0	0	0	0
	6	STT	13	4	4	4	4	4	4	4	7
	7	RG	63	32	32	20	20	32	20	20	32
	8	GG	63	32	32	20	20	32	20	20	32
	9	BG	63	32	32	20	20	32	20	20	32
	10	SCO	63	20	14	14	14	14	14	14	14
	11	VSL	63	28	26	24	24	23	24	24	25
	12	VS	63	20	32	32	32	32	32	32	26
	13	VA	63	38	29	36	36	27	36	36	34
	14	HS	63	44	48	46	46	41	46	46	46
	15	EWA	63	42	33	47	47	32	47	47	51
	16	EWP	63	45	34	4	4	36	4	4	24
	17	EWC	63	32	32	32	32	32	32	32	32
	18	EWT	63	32	32	32	32	32	32	32	32
	19	PLA	10	5	0	6	6	0	6	6	5
	20	SEP	31	OFF	OFF	OFF	OFF	OFF	OFF	OFF	OFF
OP	BYTE 0		FF	8F	95	82	87	85	82	87	87
	BYTE 1		FF	03	00	00	00	00	00	00	00
M P X	ATT		15	13	13	OFF	13	13	OFF	13	13
	SPECTRAL		63	46	46	OFF	46	46	OFF	46	46
	WIDEBAND		63	32	32	OFF	32	32	OFF	32	32
WHITE BALANCE ADJUSTMENT	HIGH - LIGHT		x	275	275	275	268	268	275	275	275
			y	295	295	295	275	275	295	295	295
			Y ± 5	33	40	45	45	40	45	45	35
	LOW - LIGHT		x	275	275	275	277	277	275	275	275
			y	295	295	295	283	283	295	295	295
			Y ± 0.2	1.4	1.4	1.4	1.4	1.4	1.4	1.4	1.4
MEASURING PULS ADJUSTMENT VOLTAGE				2.4V	2.4V	2.4V	2.4V	2.4V	2.4V	2.4V	2.4V

Downloaded from www.Manualslib.com manuals search engine

3-2-2 Option Table

NOTE : The Option Adjustment must be done in the Service Mode.

3-2-2 (A) OPTION BYTE 00

Table 3-2 Option Byte 00				
BYTE : 00	NAME	FUNCTION		REMARK
		0	1	
D7	V-SYNC	NOT USED	USED (NO V-SYNC, POWER OFF)	
D6	AUTO ON	NOT USED	USED	
D5	PIP	NO PIP FUNCTION	PIP FUNCTION	
D4	CATV	AIR/STD/HRC/IRC	AIR/STD/HRC/AFN	ARMY : 1
D3	S-VIDEO	NOT USED	USED	
D2	TONE	NO TONE CONTROL	TONE CONTROL	
D1	CRT	4 : 3 CRT	12.8 : 9 CRT	
D0	MPX	NOT USED	USED	

3-2-2 (B) OPTION BYTE 01

Table 3-3 Option Byte 01				
BYTE : 01	NAME	FUNCTION		REMARK
		0	1	
D7				
D6	AREA	USA	PAL M/N	SYSTEM/LANGUAGE
D5	LANGUAGE	00 : ENGLISH 01 : SPANISH (SEDA) 02 : PORTUGUESE 11 : NOT USED		PAL
D4				
D3	NO VIDEO MUTE	VIDEO MUTE	NO VIDEO MUTE	PAL
D2	NO AUDIO MUTE	AUDIO MUTE	NO AUDIO MUTE	
D1	ATS	NO ATS	ATS	NT
D0	V-CHIP	NO V - CHIP	V-CHIP	NT

Downloaded from www.Manualslib.com manuals search engine

3-2-4 Factory Reset

When " Factory Reset" is selected, the User-Control data reverts to the initial values.
The User-Control data is available at MENU (picture, sound and the other functions).

Note : When " Factory Reset" is selected, the Factory Mode Data does not change.

Selection sequence :
Stand-By → MUTE → 1 → 8 → 2 → POWER ON

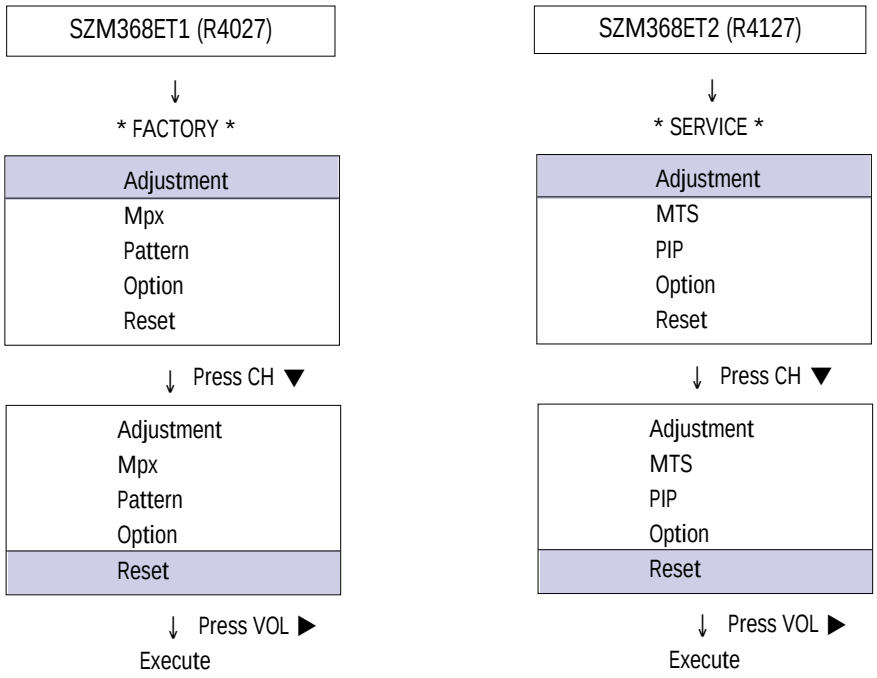

3-3 Other Adjustments

3-3-1 General

1. Usually, a color TV needs only slight touch-up adjustment upon installation. Check the basic characteristics such as height, horizontal and vertical sync and focus.

2. Observe the picture for good black and white details. There should be no objectionable color shading. If color shading is present, perform the purity and convergence adjustments described below.

3. Use the specified test equipment or its equivalent.

4. Correct impedance matching is essential.

5. Avoid overload. Excessive signal from a sweep generator might overload the front-end of the TV. When inserting signal markers, do not allow the marker generator to distort test results.

6. Connect the TV only to an AC power source with voltage and frequency as specified on the backcover nameplate.

7. Do not attempt to connect or disconnect any wires while the TV is turned on. Make sure that the power cord is disconnected before replacing any parts.

8. To protect against shock hazard, use an isolation transformer.

Downloaded from www.Manualslib.com manuals search engine

3-3-2 Automatic Degaussing

A degaussing coil is mounted around the picture tube, so external degaussing after moving the TV should be unnecessary. However, the receiver must be properly degaussed upon installation.

The degaussing coil operates for about 1 second after the power is switched ON. If the set has been moved or turned in a different direction, disconnect its AC power for at least 10 Minutes.

If the chassis or parts of the cabinet become magnetized, poor color purity will result. If this happens, use an external degaussing coil. Slowly move the degaussing coil around the faceplate of the picture tube and the sides and front of the receiver. Slowly withdraw the coil to a distance of about 6 feet before removing power.

3-3-3 High Voltage Check

CAUTION : There is no high voltage adjustment on this chassis. The B+ power supply must be set to either +135V or +125V (for 20" screen). Conditions : Full color bar input and normal picture level.

1. Connect a digital voltmeter to the second anode of the picture tube.
2. Turn on the TV. Set the Brightness and Contrast controls to minimum (zero beam current).
3. The high voltage must not exceed 29.5KV.
4. Adjust the Brightness and Contrast controls to both extremes. Ensure that the high voltage does not exceed 29.5KV under any conditions.

SIZE	21"± 1	25"	29"	29"± 1
MAX H-VOLTAGE	27.5KV	29.5KV	29.5KV	29.5KV

3-3-4 FOCUS Adjustment

1. Input a black and white signal.
2. Adjust the tuning control for the clearest picture.
3. Adjust the FOCUS control for well defined scanning lines in the center area of the screen.

3-3-5 B^+ Line Check

There are 3 power modes :

1. "A" : When AC power supply is connected ; " Stand-By" mode.
2. "B" : When " Set Power-ON" button is pressed.
3. "C" : Driven by FBT.

Each voltage is marked on its lead-in wire.
( )

3-3-6 F/S (Fail Safe) Circuit Check

1. The failsafe circuit check is the final step after servicing.
2. Turn the power switch on and adjust the screen for "Normal".
3. Temporarily short Pin R and Pin X on the chassis (RX05, RX04). Sound and picture will disappear.
4. The TV should remain in this state. This shows that the failsafe circuit is working properly.
5. To restore picture and sound, temporarily turn off the AC power supply. After about 30 seconds, switch power ON.

Downloaded from www.Manualslib.com manuals search engine

3-3-7 Color Purity Adjustment

1. Warm up the receiver. Operate it for 20 minutes, with the Brightness control set to maximum.

2. Fully degauss the receiver. Use an external degaussing coil.

3. Roughly adjust convergence by rotating the Convergence Magnet.

4. Input a black and white signal.

5. Loosen the Deflection Yoke clamp screw, and move the Deflection Yoke as close to the purity magnet as possible.

6. Loosen the Purity Magnet clamp. Adjust the purity magnet so that the vertical green raster is precisely at the center of the screen. Then tighten the clamp.

7. Slowly move the Deflection Yoke forward, and adjust it for the best overall green screen.

8. Tighten the Deflection Yoke clamp screw.

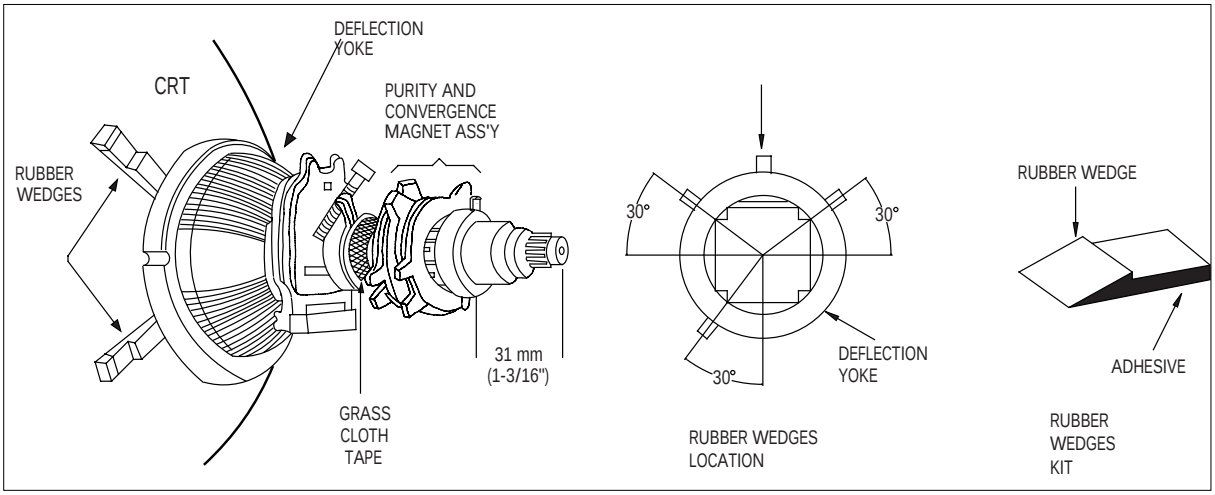

Fig. 3-1 Tube Assembly

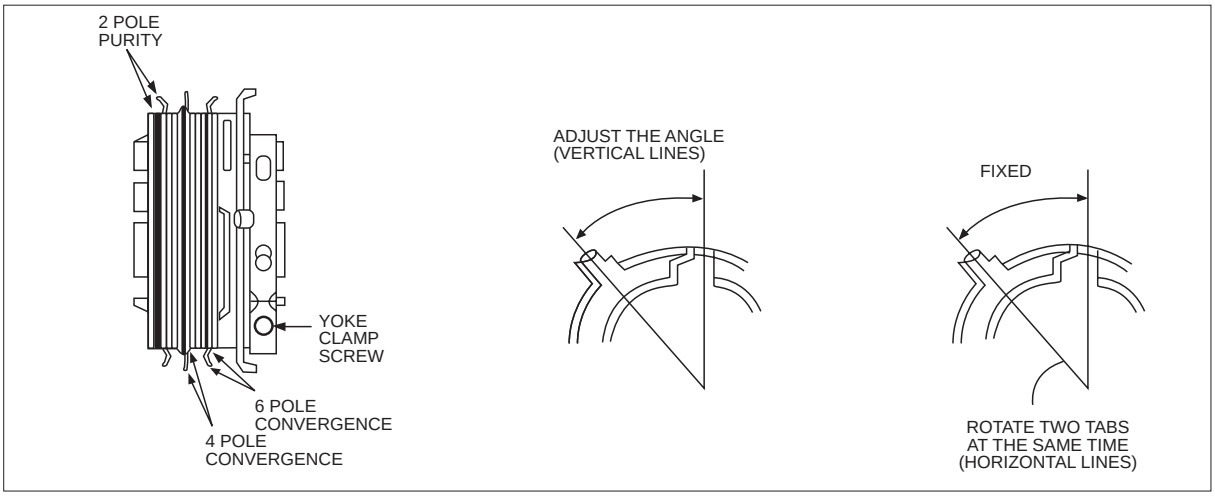

Fig. 3-2 Purity and Convergence Magnets

Downloaded from www.Manualslib.com manuals search engine

3-3-8 Center Convergence Adjustment

Note: Before attempting any convergence adjustment, make sure that the receiver has been powered ON for at least twenty minutes.

1. Input a crosshatch pattern from a color bar generator.

2. Adjust the Brightness and Contrast controls for a well defined pattern.

3. Adjust the two tabs of the 5-pole magnets. Change the angle between the tabs, and superimpose red and blue vertical lines in the center area of the picture screen.

4. Next, turn both tabs at the same time. Keep the angle between the tabs constant, and superimpose the red and blue horizontal lines at the center of the screen.

5. Adjust the two tabs of the 6-pole magnets. Superimpose the red/blue lines on the green. Adjusting the angle affects the horizontal lines.

6. Repeat adjustments 3, 4 and 5. The dot movement is complex because the 4-pole and 6-pole magnets interact.

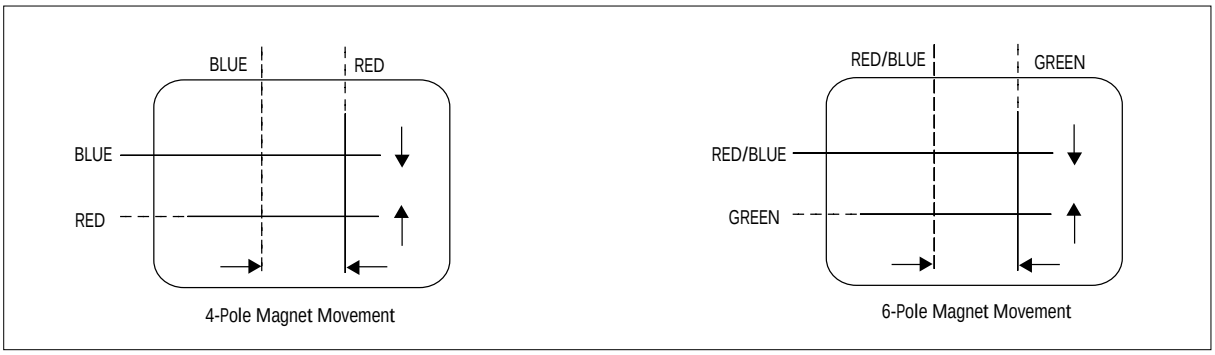

Fig. 3-3 Center Convergence Adjustment

3-3-9 AGC Adjustment

1. Input a COLOR-BAR pattern. (CH2)

2. Set the RF input signal to 70 dBμV.

3. Use Generator for PM5518 & PM5418.

4. Set AGC (in the Factory Mode) so that the DC level of IC TDA8377 Pin 53 is 3.0±0.05V.

3-3-10 AFT (VCO Adjustment)

1. Input an AGC adjustment signal.

2. Select Factory Mode VCO and press the MUTE key one time.

3. GEOMATRIX adjustments

VS	EWA
VA	EWP
VSL	EWC
HS	EWT

Downloaded from www.Manualslib.com manuals search engine

3-3-11 White Balance Adjustment

3-3-11 (A) SCREEN ADJUSTMENTS

1. Input a TOSHIBA pattern.
2. Check R506 “G” pin on the CRT PCB with an oscilloscope.
3. Enter the Horizontal Line Mode.
4. Adjust the Screen Control on the FBT so that the waveform of the 21st line is DC 2.0 (±0.5)V.

SIZE	29”	26”	22”
DC	2.4	2.4	2.4

3-3-11 (B) HIGH-LIGHT ADJUSTMENT

1. NOTE : If a color analyzer is not available, then approximate the following color adjustments “by eye”.
2. Input a TOSHIBA pattern.
3. Set high-light to 290/300 (X,Y) with a color analyzer.
4. Set low-light to 1.4F/L.
5. Adjust RG, BG and set GG to step 32.

	30”	29”	26”	22”
HEIGHT LIGHT	33 ± 5	37 ± 5	45 ± 5	45 ± 5

3-3-11 (C) SUB-CONTRAST ADJUSTMENT

1. Set SCT so that the brightness level in high-light is 40 F/L (for a 29” SCREEN).

3-3-11 (D) SUB-BRIGHTNESS ADJUSTMENT

1. Input a TOSHIBA pattern.
2. Set SBT so that the brightness level in low-light is 1.4 F/L.

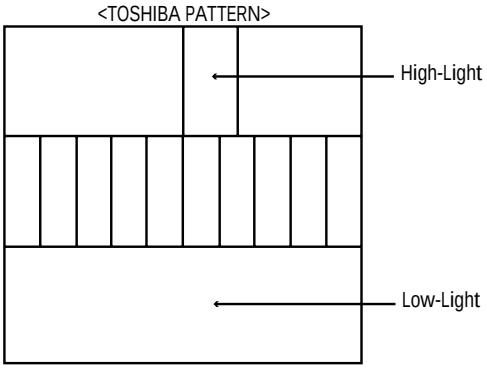

3-3-11 (E) SUB-COLOR ADJUSTMENT

Set “SCR” in the Service Mode to step 0.

3-3-11 (F) SUB-TINT ADJUSTMENT

Set “STT” in the Service Mode to step 4.

3-3-11 (G) VERTICAL SIZE ADJUSTMENT

1. Input a lion head pattern.
2. Set VS to 32 in the Factory Mode.
3. Set VA so that the top margin is 4.0. Adjust SL so that the bottom margin is 4.0. If the top and bottom margins are different, adjust VA so that their sum is 8.0.

3-3-11 (H) HORIZONTAL SHIFT ADJUSTMENT

1. Input a lion head pattern.
2. Adjust “HS” in the Service Mode so that the left and right margins of the lion head pattern are 5.0 ± 0.5 : CT633BW/CT683BW, 6.3 ± 0.5 : CT566BV/CT566BW/CT568BW/CT765DW/CT766DW/CT762B/CT25D4/CT29D4.

Downloaded from www.Manualslib.com manuals search engine

3-3-12 Power Consumption Reduction Circuit during Stand-by (Option)

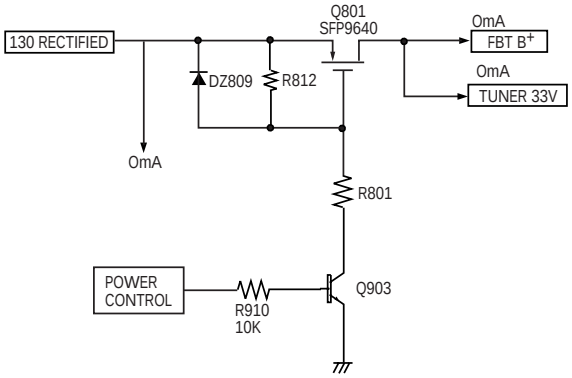

For the power system of K51A chassis, all output voltages remain the same during stand-by. So, to reduce power consumption, it is necessary to cut the leakage current flowing through FBT B^+ (130V) and tuner port V_T (33V) during stand-by (Picture OFF).

The power consumption reduction circuit cuts leakage current. A P-channel MOSFET is used as a switching element.
The operating principles are as follows:

1. In stand-by, the voltage of the power control port (micom IC) becomes low (0V). During power ON, however, it becomes high (over 4V).

2. The voltage between S-G (Q801 P-channel MOSFET) should be over 3.5V, so that the S-D current (Q801) can keep flowing.

3. When the voltage of the power control port becomes low, the current flowing through Q903 (R812) is cut.

4. When the voltages across R803 become less than 3.5V, the S-D current (Q801) is cut.

5. DZ809 is required for protecting the G-port (Q801).

3-3-13 Precautions when servicing

1. Q801 can sustain a continuous flow of 11ADC. If Q801 is destroyed, the S-D is shorted. But, the TV functions normally and only the power consumption during stand-by increases (2.5W→ 6W).

2. No Picture ON : Q903 is open or DZ809 is shorted. At this time, check both Q903 and DZ809. If the power-consumption reduction circuit does not work normally after checking both Q903 and DZ809, then short the S-D ports of Q801.

Downloaded from www.Manualslib.com manuals search engine

4. Troubleshooting

4-1 No Raster and No Sound

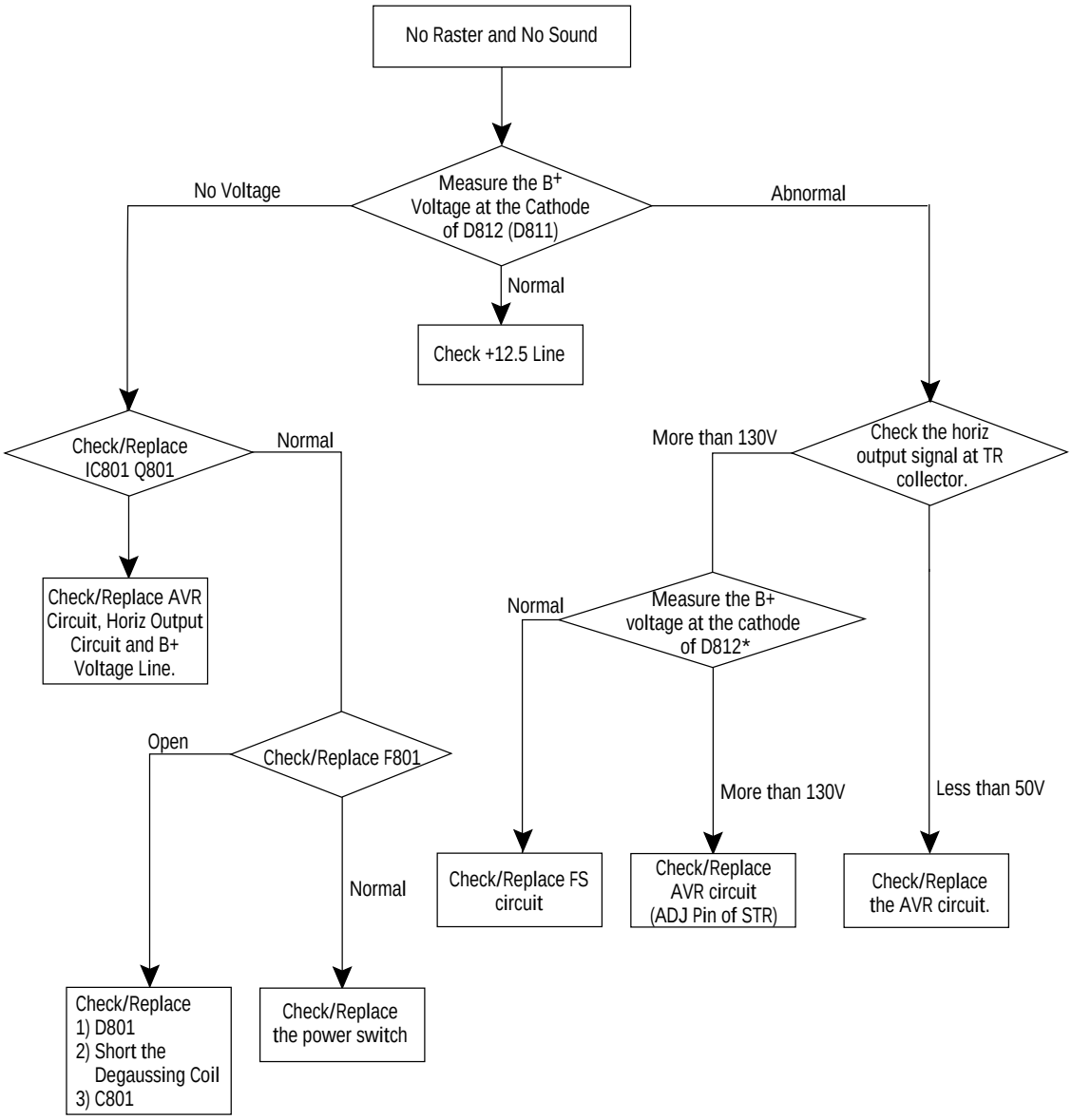

Downloaded from www.Manualslib.com manuals search engine

4-2 No Raster (Sound OK)

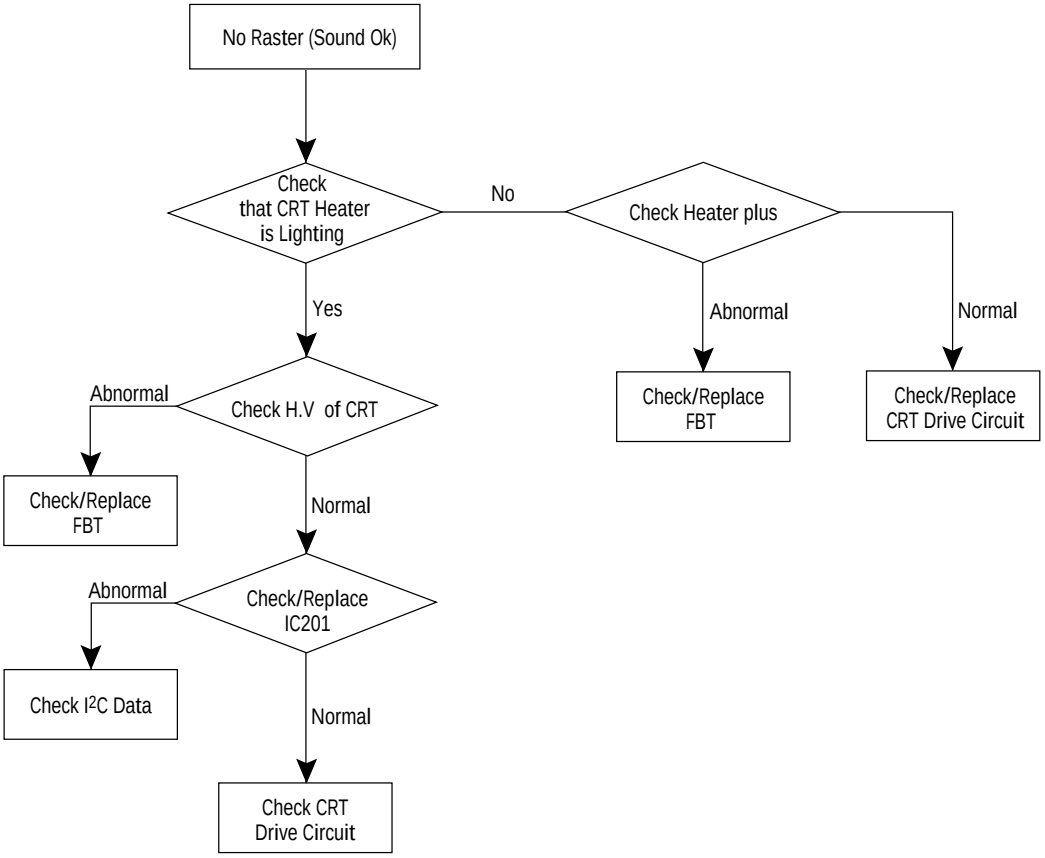

Downloaded from www.Manualslib.com manuals search engine

4-3 No Vert Scan (Horizontal Line)

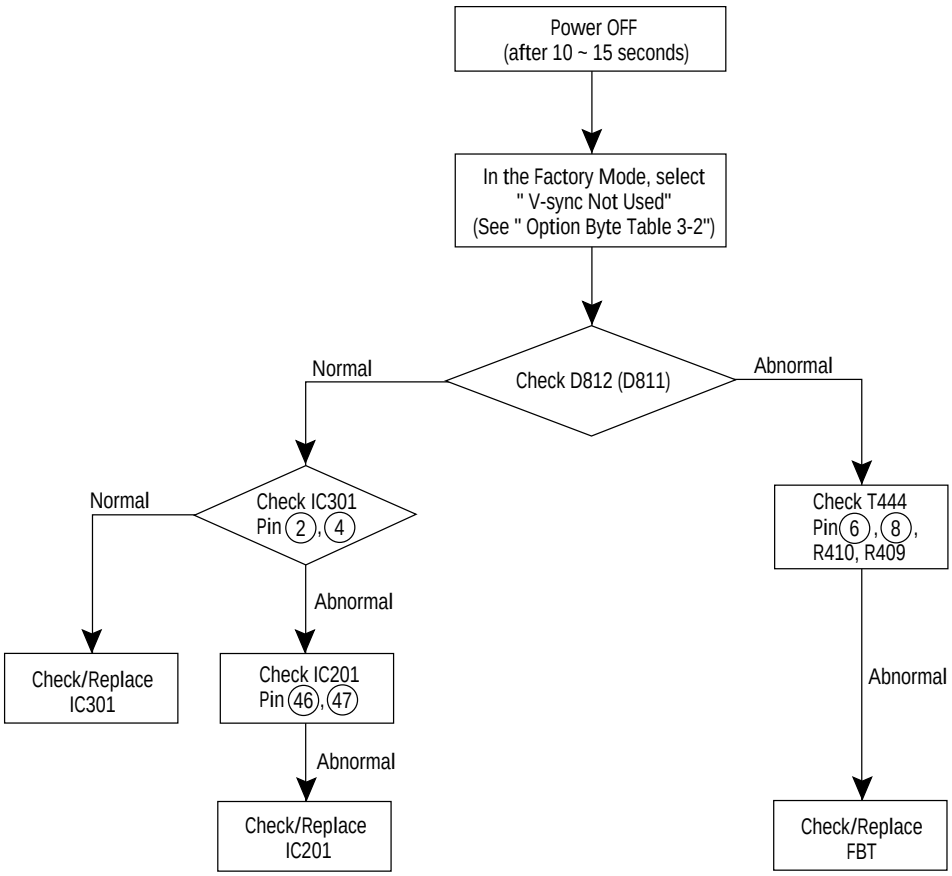

Downloaded from www.Manualslib.com manuals search engine

4-4 No Sound

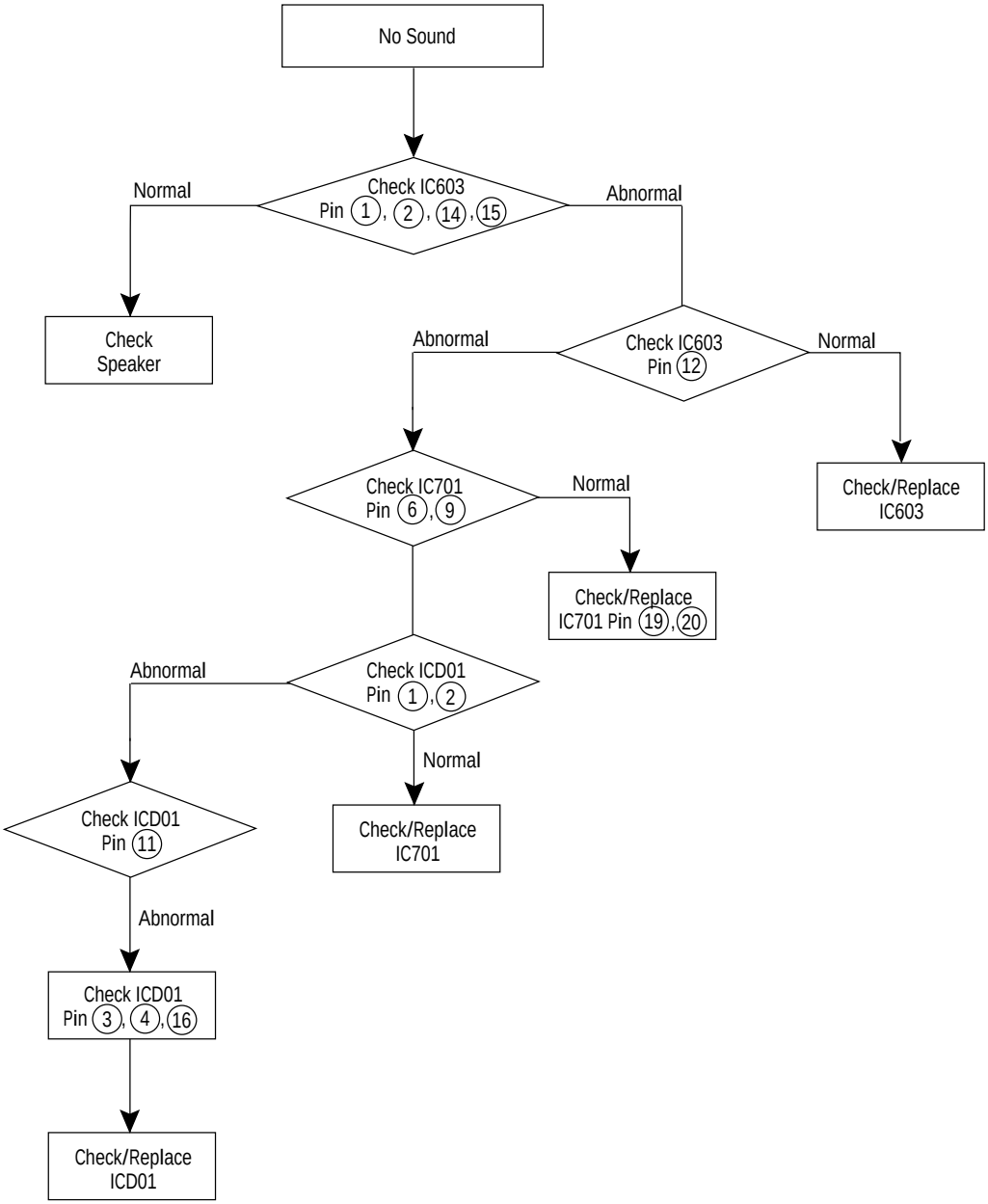

Downloaded from www.Manualslib.com manuals search engine

4-5 No Color

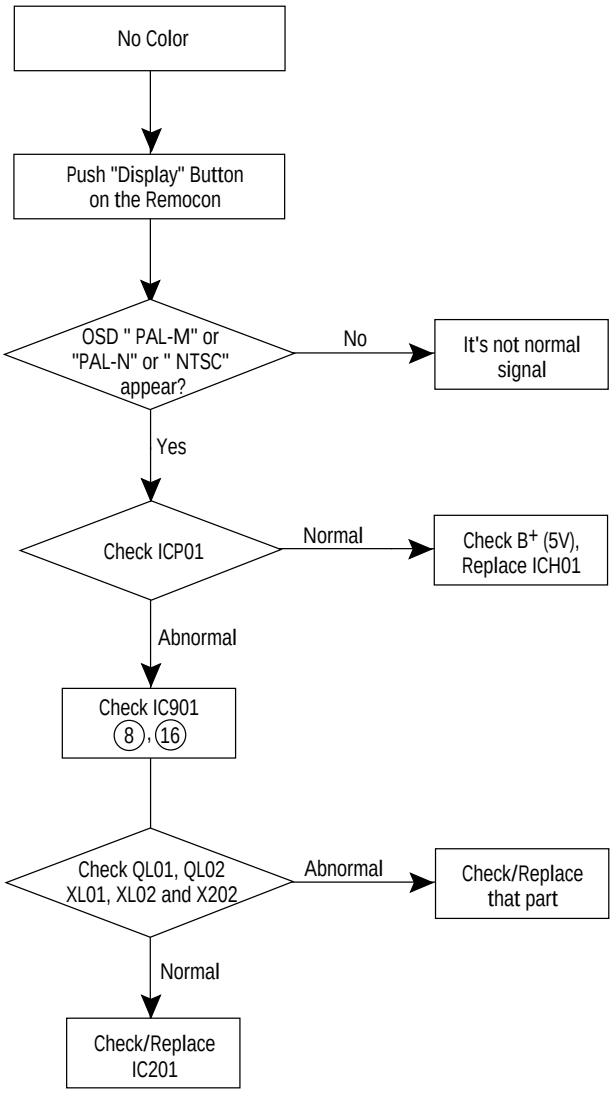

Downloaded from www.Manualslib.com manuals search engine

MEMO

Downloaded from www.Manualslib.com manuals search engine

5. Exploded Views & Parts List

5-1 TXJ2060, TXJ2066, TXJ2067 5-1

5-2 TXJ2554, TXJ2754 5-2

5-3 TXJ2567, TXJ2566 5-3

5-4 TXJ2766, TXJ2767, TXJ2768 5-4

5-5 TXJ2879 5-5

Downloaded from www.Manualslib.com manuals search engine

5-1 TXJ2060, TXJ2066, TXJ2067

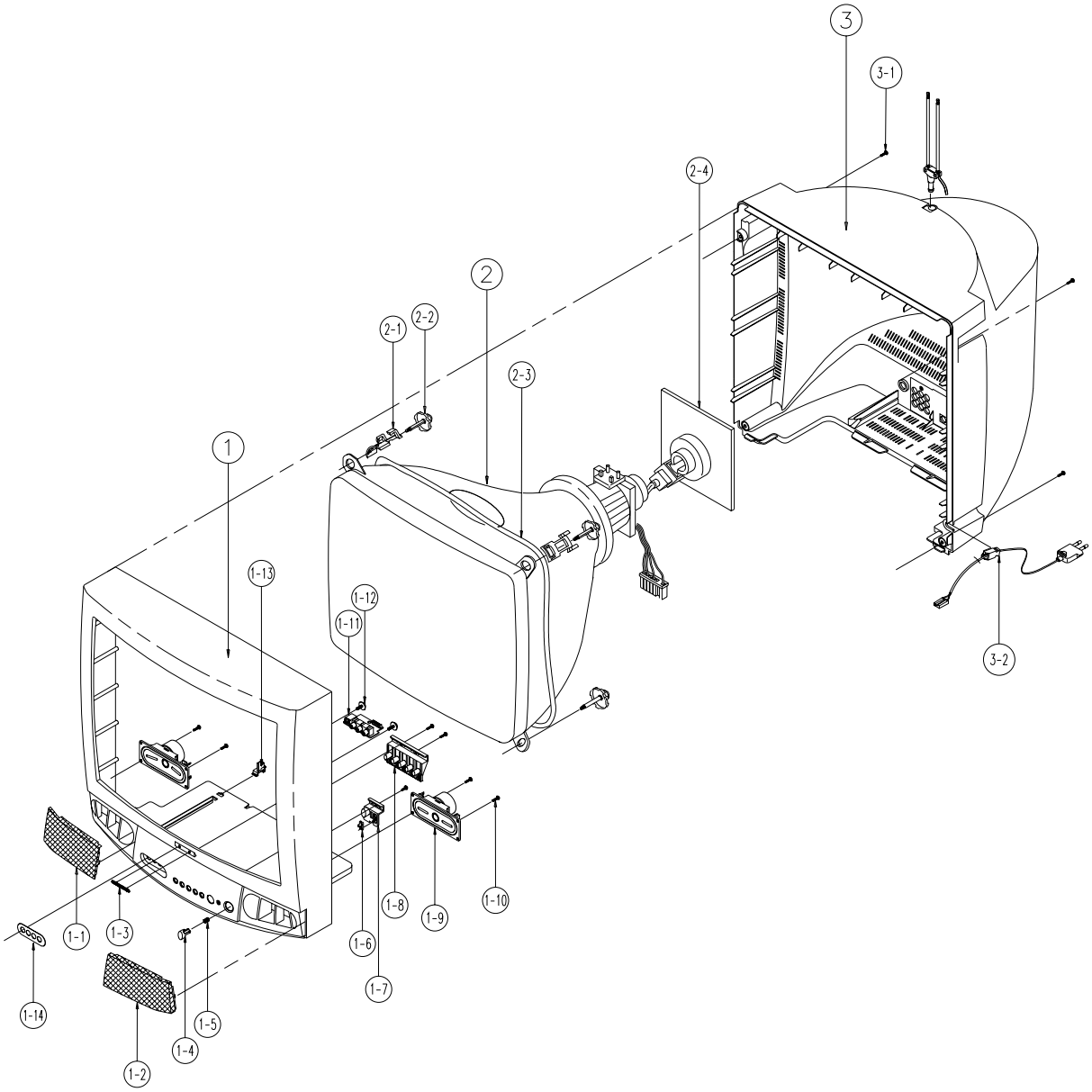

Downloaded from www.Manualslib.com manuals search engine

No.	Code No.	Description	Specification	Q'ty	Remark
1	L2001-0183-025	CABINET-FRONT	CT-5345HIPSVOBLK	1	LOCAL
1-1		CABINET-OPTION			
1-2		CABINET-OPTION			
1-3	AA64-70015A	BADGE-BRAND	-,AL,-,L45,SILVER,	1	
1-4	L4083-0263-000	KNOB-POWER	ABSHBBLKPRINTGREEN6345/6	1	
1-5	AA61-60003T	SPRING-CS	-,-,SUS304,0.5,OD7,H	1	
1-6	AA64-40255A	INDICATOR-LED	-,ACRYL,HB,-,-,5	1	
1-7	AA64-40254A	WINDOW-REMOCON	-,PC,-,-,-,5345	1	
1-8	L4083-0263-000	KNOB-POWER	ABSHBBLKPRINTGREEN6345/6	1	
1-9	3001-000003	SPEAKER	3W,16ohm,88+-2dB,180+-36Hz	2	
1-10	6002-000514	SCREW-TAPPING	RH,+,2,M4,L15,ZP	4	SPK+CF
1-11	LA97-90003N	ASSY-PCB,A/V	-,KCT52A,K51A-,-,S	1	
1-12	AA60-10002A	SCREW-TAPPING	-,RH,+,M4,L12,ZP	2	PA+CF
1-13	AA61-40053A	STOPPER-PCB	-,HIPS,HB,-,WHT,AL	1	
2	AA03-10030W	CRT-COLOR	-,A51KRE83X(D),+380mG,21,90de	1	
2-1	AA60-10050R	SCREW-ASSY	WC,HH,+M5,L31.5,SWR	4	
2-2	L9400-0002	HOLDER-DEGAUSSING	20POLYVINIL	4	
2-3	AA27-20003G	COIL-DEGAUSSING	S/VOLTAGE21	1	
2-4	3704-000110	SOCKET-CRT	29.1PI,1.0~2.3KVD,I	1	V999
3	L2001-0184-000	BACK-CABINET	CT-5345/46HIPSVOB	1	
3-1	6002-000514	SCREW-TAPPING	RH,+,2,M4,L15,ZP	5	CB+CF
3-2	AA39-10007Y	POWER-CORD	-,EP2/YES,SPT-2 18AWGx2C,2.4m	1	

Downloaded from www.Manualslib.com manuals search engine

5-2 TXJ2554, TXJ2754

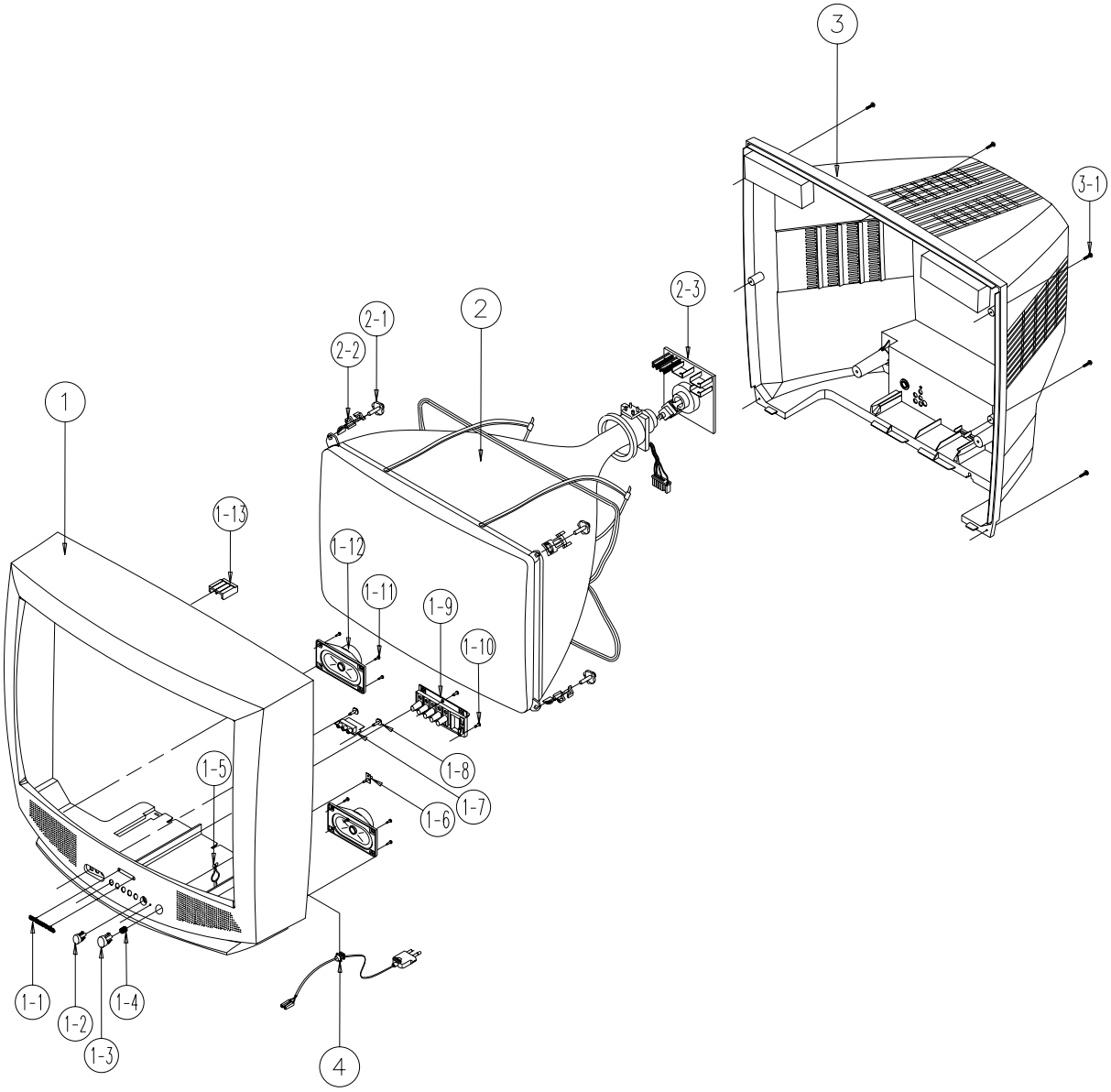

Downloaded from www.Manualslib.com manuals search engine

No.	Code No.	Description	Specification	Q'ty	Remark
1	AA64-31148A	CABINET-FRONT	HIPS VO BLK CT6	1	TXJ2754
	AA64-31137A	CABINET-FRONT	HIPS VO BLK PA100 CT-633	1	TXJ2554
1-1	AA64-70010A	BADGE-BRAND	-,AL,-,L50,SILVER	1	TXJ2754
	AA64-70117B	BADGE-BRAND	AL,SS,R2000,25,SILVER CT-633	1	TXJ2554
1-2	AA64-40472A	WINDOW-REMOTE	PCVIOLET CT-633	1	
1-3	AA64-10733A	KNOB-POWER	ABS HB BLK CT-633	1	
1-4	AA61-60003T	SPRING-CS	-,-,SUS304,0.5,OD7,	1	
1-5	AA65-30018A	CLAMP-WIRE	-,NYLON6.6,-,-,DATL	1	
1-6	AA64-40473A	INDICATOR-LED	PMMA CLR CT-633	1	
1-7	LA95-90026X	ASSY-PCB,A/V	CT-683B,KCT57A,NTSC,100	1	
1-8	AA60-10002A	SCREW-TAPPING	-,RH,+,M4,L12,ZP	2	AV+CF
1-9	AA64-10732A	KNOB-CONTROL	ABS HB BLK CT-63	1	
1-10	6002-000514	SCREW-TAPPING	RH,+,2,M4,L15,ZP	2	KC+CF
1-11	6002-000514	SCREW-TAPPING	RH,+,2,M4,L15,ZP	4	SPK+CF
1-12	3001-001039	SPEAKER	160HM,3W	2	TXJ2754
	3001-000003	SPEAKER	3W,16ohm,88+-2dB,180+-36Hz	2	TXJ2554
1-13	L3113-0003-011	BOSS-CABINET	HIPSVOBLKCT-5073	1	
2	AA03-10026A	CRT-COLOR	A68ADT25X01,+380MG,29,111DE	1	TXJ2754
	L1000-0027	CRT-COLOR25	A63AFW32X(DARKTIN	1	TXJ2554
2-1	AA60-10050R	SCREW-ASSY	WC,HH,+M5,L31.5,SWR	4	CRT+CF
2-2	AA65-30004A	CLAMP-D,COIL	-,NYLON-66,V0,WHT	8	
2-3	3704-000114	SOCKET CRT	14P,29.1,35.5SN,1SH09S/BK	1	V999
3	AA64-31149A	CABINET-BACK	HIPS VO BLK CT68	1	TXJ2754
	AA64-31138A	CABINET-BACK	HIPS VO BLK CT-6	1	TXJ2554
3-1	6002-000516	SCREW-TAPPING	RH,+,2,M4,L20,ZP	7	CB+CF
4	AA39-10007Y	POWER-CORD	-,EP2/YES,SPT-2 18AWGx2C,2.4m	1	

Downloaded from www.Manualslib.com manuals search engine

5-3 TXJ2567, TXJ2566

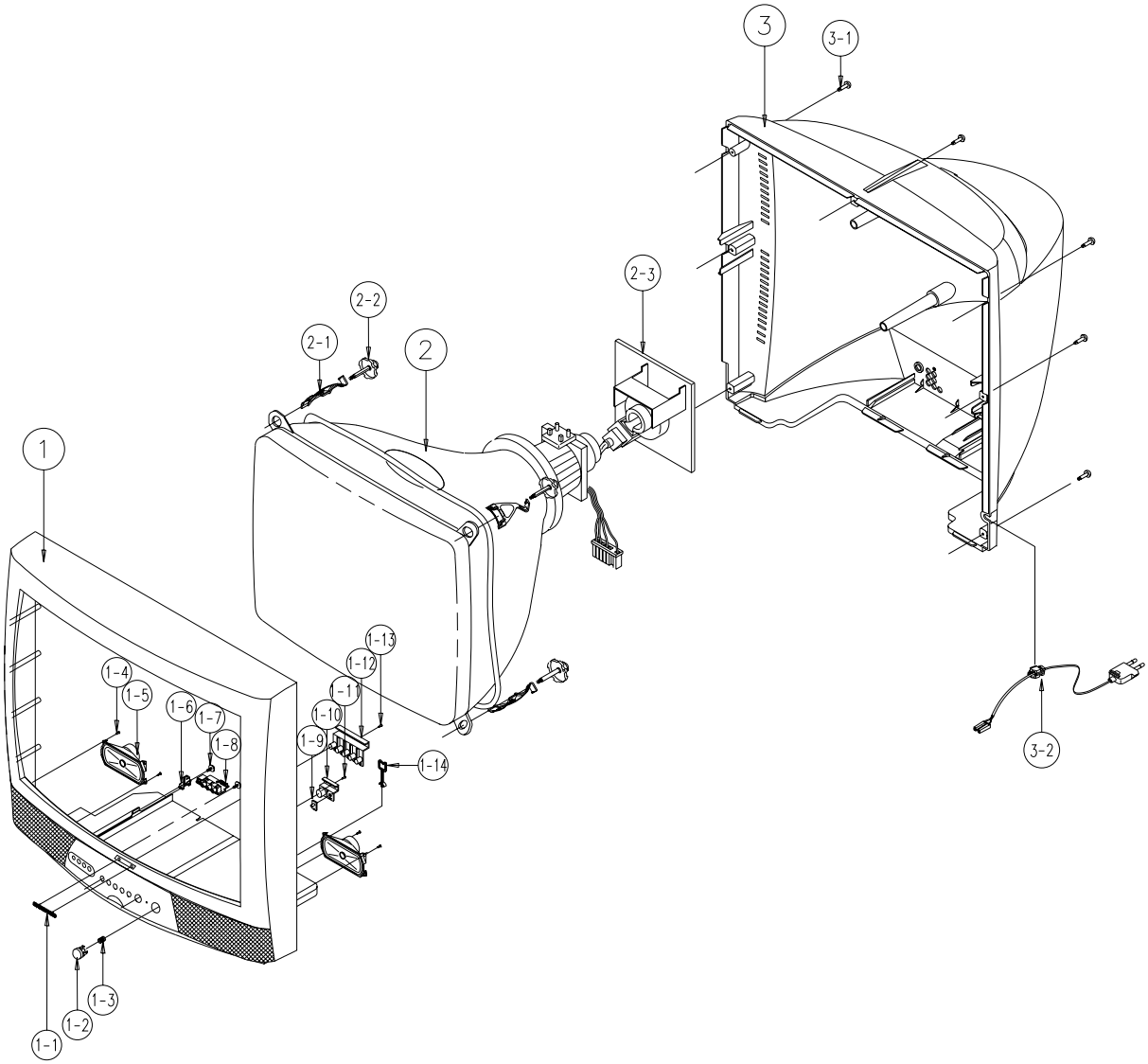

Downloaded from www.Manualslib.com manuals search engine

No.	Code No.	Description	Specification	Q'ty	Remark
=1	AA64-31346A	CABINET-FRONT	HIPSVOBLKBK708P	1	
1-1	AA64-70117B	BADGE-BRAND	AL,SS,R2000,25,SILVER CT-633	1	
1-2	AA64-10804A	KNOB-POWER	ABSHBBLK	1	
1-3	AA61-60003J	SPRING-CS	-,-,SUS304,0.5,OD6,H	1	
1-4	6002-000514	SCREW-TAPPING	RH,+,2,M4,L15,ZP	4	SPK+CF
1-5	3001-001038	SPEAKER	6W,16OHM,92DB,140HZ	2	
1-6	AA61-40113A	STOPPER-PCB	-,ABS,HB,NTR.	1	
1-7	AA60-10002A	SCREW-TAPPING	-,RH,+,M4,L12,ZP	2	PAV+CF
1-8	LA97-90003N	ASSY-PCB,A/V	-,KCT52A,K51A-,-,S	1	
1-9	AA64-40525A	INDICATOR-LED	ACRYLCLR	1	
1-10	AA64-40524A	WINDOW-REMOTE	PCVIOLET	1	
1-11	6002-000514	SCREW-TAPPING	RH,+,2,M4,L15,ZP	1	
1-12	AA64-10803A	KNOB-CONTROL	ABSHBBLK	1	
1-13	6002-000514	SCREW-TAPPING	RH,+,2,M4,L15,ZP	1	KC+CF
1-14	AA65-30018A	CLAMP-WIRE	-,NYLON6.6,-,-,DATL	1	
2	L1000-0027	CRT-COLOR25	A63AFW32X(DARKTIN	1	
2-1	AA60-10050R	SCREW-ASSY	WC,HH,+M5,L31.5,SWR	4	
2-2	L9400-0001	HOLDER-DEGAUSSING	25POLYVINYLCHLORIDEFL	4	
2-3	3704-000114	SOCKET CRT	14P,29.1,35.5SN,1SH09S/BK	1	V999
3	AA64-31348A	CABINET-BACK	HIPSVOBLK	1	
3-1	6002-000514	SCREW-TAPPING	RH,+,2,M4,L15,ZP	7	CB+CF
3-2	AA39-10007Y	POWER-CORD	-,EP2/YES,SPT-2 18AWGx2C,2.4m	1	

Downloaded from www.Manualslib.com manuals search engine

5-4 TXJ2766, TXJ2767, TXJ2768

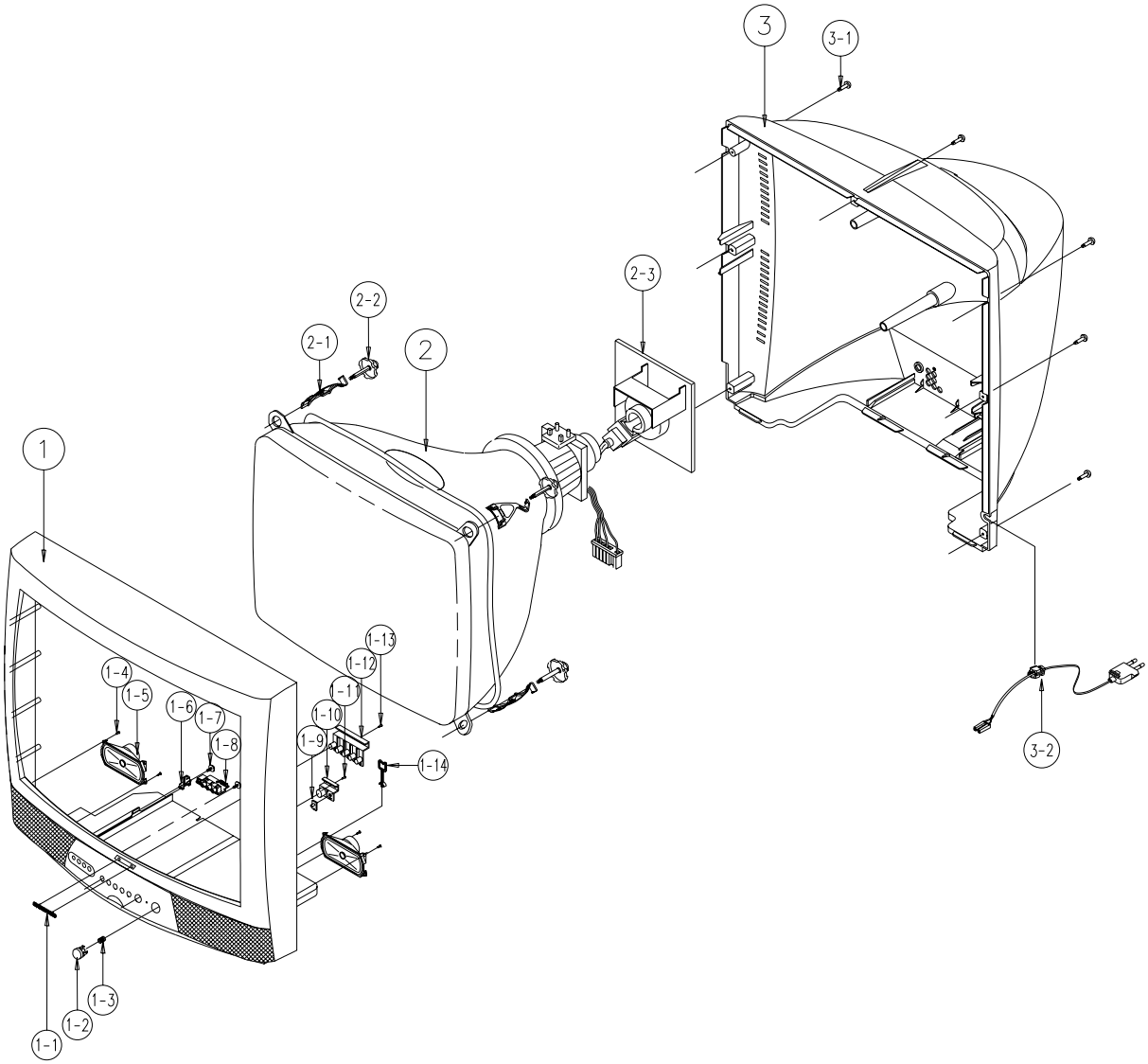

Downloaded from www.Manualslib.com manuals search engine

No.	Code No.	Description	Specification	Q'ty	Remark
1	AA64-31345A	CABINET-FRONT	HIPSVOBLKBK708P	1	
1-1	AA64-70117B	BADGE-BRAND	AL,SS,R2000,25,SILVER CT-633	1	
1-2	AA64-10804A	KNOB-POWER	ABSHBBLK	1	
1-3	AA61-60003J	SPRING-CS	-,-,SUS304,0.5,OD6,	1	
1-4	6002-000514	SCREW-TAPPING	RH,+,2,M4,L15,ZP	4	SPK+CF
1-5	3001-000190	SPEAKER	5W,8OHM,89DB,150HZ	2	
1-6	AA61-40113A	STOPPER-PCB	-,ABS,HB,NTR.	1	
1-7	AA60-10002A	SCREW-TAPPING	-,RH,+,M4,L12,ZP	2	PAV+CF
1-8	LA97-90003N	ASSY-PCB,A/V	-,KCT52A,K51A-,-,S	1	
1-9	AA64-40525A	INDICATOR-LED	ACRYLCLR	1	
1-10	AA64-40524A	WINDOW-REMOTE	PCVIOLET	1	
1-11	6002-000514	SCREW-TAPPING	RH,+,2,M4,L15,ZP	1	
1-12	AA64-10803A	KNOB-CONTROL	ABSHBBLK	1	
1-13	6002-000514	SCREW-TAPPING	RH,+,2,M4,L15,ZP	1	KC+CF
1-14	AA65-30018A	CLAMP-WIRE	-,NYLON6.6,-,-,DATL	1	
2	AA03-10026R	CRT-COLOR	A70QBZ791X001,+380MG,29,100	1	
2-1	AA60-10050R	SCREW-ASSY	WC,HH,+M5,L31.5,SWR	4	
2-2	AA65-30004A	CLAMP-D,COIL	-,NYLON-66,V0,WHT	8	
2-3	3704-000114	SOCKET CRT	14P,29.1,35.5SN,1SH09S/BK	1	V999
3	AA64-31347A	CABINET-BACK	HIPSVOBLK	1	
3-1	6002-000514	SCREW-TAPPING	RH,+,2,M4,L15,ZP	7	CB+CF
3-2	AA39-10007Y	POWER-CORD	-,EP2/YES,SPT-2 18AWGx2C,2.4m	1	

Downloaded from www.Manualslib.com manuals search engine

5-5 TXJ2879

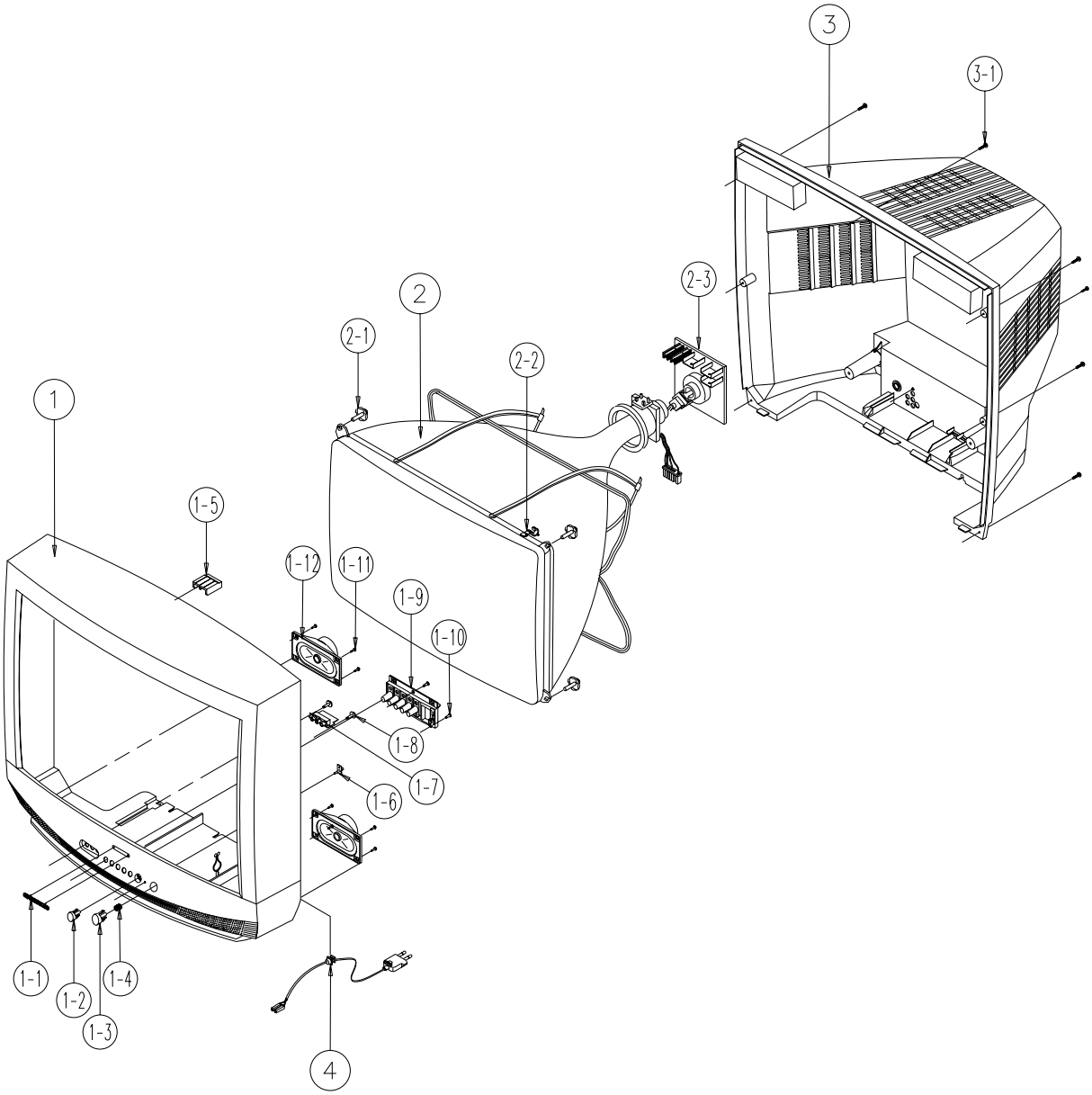

Downloaded from www.Manualslib.com manuals search engine

No.	Code No.	Description	Specification	Q'ty	Remark
1	AA64-31181A	FRONT-CABINET	HIPS VO BLK CT-762	1	
1-1	AA64-70117B	BADGE-BRAND	AL,SS,R2000,25,SILVER CT-633	1	
1-2	AA64-40487A	WINDOW-REMOTE	PC VIOLET CT-762	1	
1-3	AA64-10750A	KNOB-POWER	ABS HB GRAY G3676 TACT	1	
1-4	AA61-60003A	SPRING-CS	-,-,SUS304,0.5,OD7,H16,N7,-,-	1	
1-5	L3113-0003-011	BOSS-CABINET	HIPSVOBLKCT-5073	1	
1-6	AA64-40509A	INDICATOR-LED	ACRYL CLR CT-762	1	
1-7	LA95-90026X	ASSY-PCB,A/V	CT-683B,KCT57A,NTSC,100	1	
1-8	AA60-10002A	SCREW-TAPPING	-,RH,+,M4,L12,ZP	2	AV+CF
1-9	AA64-10749A	KNOB-CONTROL	ABS HB GRAY G3676	1	
1-10	6002-000514	SCREW-TAPPING	RH,+,2,M4,L15,ZP	2	KC+CF
1-11	6002-000514	SCREW-TAPPING	RH,+,2,M4,L15,ZP	4	SPK+CF
1-12	3001-001071	SPEAKER	5W,8OHM,90DB,180HZ	2	
2	AA03-10026R	CRT-COLOR	A70QBZ791X001,+380MG,29,100	1	
2-1	AA60-10050R	SCREW-ASSY	WC,HH,+M5,L31.5,SWR	4	CRT+CF
2-2	AA65-30004A	CLAMP-D,COIL	-,NYLON-66,V0,WHT	8	
2-3	3704-000114	SOCKET CRT	14P,29.1,35.5SN,1SH09S/BK	1	V999
3	AA64-31183A	CABINET-BACK	HIPS VO GRAY CT-762	1	
3-1	6002-000516	SCREW-TAPPING	RH,+,2,M4,L20,ZP	7	CB+CF
3-2	AA39-10007Y	POWER-CORD	-,EP2/YES,SPT-2 18AWGx2C,2.4m	1	

Downloaded from www.Manualslib.com manuals search engine

6. Electric Parts List

6-1 TXJ2060 (TXJ2067 and TXJ2060 Dissimilar Parts)

Loc. No.	Code No.	Description ; Specification	Remark
		ASSY-PCB,MAIN	
*	AA94-10147G	ASSY-PCB,MAIN;TXJ2060,K51A,MONO,USA,SECA	
SF101	2904-000304	FILTER-SAW;M1859MNTSC/USAVIFS	
JA701	3722-001192	JACK RCA;2P(9P),3.4MM,SN,BLK#1622	
C222	2202-000279	C-CERAMIC,MLC-AXIAL;47PF,5%,5	
C235	2202-000279	C-CERAMIC,MLC-AXIAL;47PF,5%,5	
R618	2001-000812	R-CARBON;5.6Kohm,5%,1/8W,AA,TP,1.8x3.2mm	
R623	2001-000812	R-CARBON;5.6Kohm,5%,1/8W,AA,TP,1.8x3.2mm	
L217	2701-000158	INDUCTOR-AXIAL;22UH,10%,2.5X3	
		REMOCON	
*	AA59-10112F	REMOCON;DP,TM58,-,-,AA59-10109E,-,-,-,	SEA
*	AA59-10112K	REMOCON;DP,-,TM58,AA59-10109J,-,-,-,-,	SECA
		ASSY-PCB,A/V	
*	LA97-90003P	ASSY-PCB,A/V;-,K51A,MONO,JACK	
	3722-001282	JACK-RCA;2P(3P),3.2mm,AU,BLK,	

Loc. No.	Code No.	Description ; Specification	Remark
		ASSY-ACCESSORY	
	AA68-00057B	MANUAL-USERS;K51A,ENG,µfiÇ¥Áö2~1µµ,B5,W/P	
	AA68-11371A	MANUAL-USERS;K51A,FRE,TM58,B5,W/P 100(G)	
		ASSY-CABINET,FRONT	
	AA92-30152G	ASSY-CABINET,FRONT;K51A,SEA,MONO,TXJ2060	SEA
	AA92-30152H	ASSY-CABINET,FRONT;K51A,SECA,MONO,2060	SECA
	AA64-60278H	INLAY-AV;-,K51A,MONO,PS,T0.5,BLK,	
	AA64-60417B	INLAY-BACK;K51A,MONO,BL/G,P	

6-2 TXJ2066 (TXJ2067 and TXJ2066 Dissimilar Parts)

Loc. No.	Code No.	Description ; Specification	Remark
		REMOCON	
	AA59-10113B	REMOCON;DP,TM59,-,-,-,-,-,-,AA59-10110B,	SEA
	AA59-10113H	REMOCON;DP,TM59,-,-,-,-,-,-,AA59-10110H,	SECA
		ASSYCABINET,FRONT	
	AA92-30152B	ASSYCABINET,FRONT;TXJ2066,SEC	
		ASSY-ACCESSORY	
	AA68-00057B	MANUAL-USERS;K51A,ENG,2~1µµ,B5,W/P	SECA
	AA68-11371A	MANUAL-USERS;K51A,FRE,TM58,B5,W/P 100(G)	SECA

Downloaded from www.Manualslib.com manuals search engine

6-3 TXJ2067/UCX

Loc. No.	Code No.	Description ; Specification	Remark
		ASSY-PCB,MAIN	
A/MAIN	AA94-10147F	ASSY-PCB,MAIN;TXJ2066/67,K51A,USA/SECA	
C101	2401-000962	C-AL;22uF,20%,50V,GP,TP,5x11,5	
C102	2401-001363	C-AL;470UF,20%,16V,GP,TP,10X12	
C104	2202-000127	C-CERAMIC,MLC-AXIAL;10NF,+80-2	
C105	2401-001333	C-ELECTROLYTIC;CE04WTAPG50V0.4	
C106	2202-000127	C-CERAMIC,MLC-AXIAL;10NF,+80-2	
C107	2401-001333	C-ELECTROLYTIC;CE04WTAPG50V0.4	
C108	2401-000480	C-AL;10UF,20%,50V,GP,5X11MM,5M	
C110	2401-001840	C-AL;100UF,20%,16V,GP,TP,6.3X1	
C111	2202-000286	C-CERAMIC,MLC-AXIAL;56PF,5%,50	
C112	2202-000127	C-CERAMIC,MLC-AXIAL;10NF,+80-2	
C113	2202-000127	C-CERAMIC,MLC-AXIAL;10NF,+80-2	
C116	2202-000127	C-CERAMIC,MLC-AXIAL;10NF,+80-2	
C117	2202-000127	C-CERAMIC,MLC-AXIAL;10NF,+80-2	
C202	2305-000665	C-FILM;CF922N63VT104-J-40/1053	
C203	2305-000665	C-FILM;CF922N63VT104-J-40/1053	
C204	2401-000660	C-ELECTROLYTIC;CE04WTAPG50V2.2	
C205	2301-000224	C-FILM,PEF;22NF,5%,50V,7.4X3.9	
C210	2401-001840	C-AL;100UF,20%,16V,GP,TP,6.3X1	
C211	2305-000665	C-FILM;CF922N63VT104-J-40/1053	
C212	2202-002037	C-CERAMIC,MLC-AXIAL;100NF,+80-20	
C213	2305-000665	C-FILM;CF922N63VT104-J-40/1053	
C217	2202-000819	C-CERAMIC,MLC-AXIAL;47NF,+80-2	
C223	2201-000258	C-CERAMIC,DISC;17PF,5%,50V,NPO,-,5MM,TP	
C224	2301-000445	C-FILM,PEF;4.7nF,5%,50V,TP,5.5x7x3mm,5mm	
C225	2305-000665	C-FILM;CF922N63VT104-J-40/1053	
C226	2401-001840	C-AL;100UF,20%,16V,GP,TP,6.3X1	
C227	2305-000665	C-FILM;CF922N63VT104-J-40/1053	
C228	2401-000660	C-ELECTROLYTIC;CE04WTAPG50V2.2	
C229	2301-000342	C-FILM,PEF;2.2nF,5%,50V,TP,7.4x3.9x13mm,	
C230	2202-000162	C-CERAMIC,MLC-AXIAL;15PF,5%,50	
C232	2301-000445	C-FILM,PEF;4.7nF,5%,50V,TP,5.5x7x3mm,5mm	
C233	2401-000603	C-AL;1UF,20%,50V,GP,5X11MM,5MM	
C234	2309-000138	C-FILM,PE-PPF;100NF,5%,50V,TP,	
C235	2202-000286	C-CERAMIC,MLC-AXIAL;56PF,5%,50	
C237	2305-000665	C-FILM;CF922N63VT104-J-40/1053	
C239	2401-000603	C-AL;1UF,20%,50V,GP,5X11MM,5MM	
C240	2201-000379	C-CERAMIC,DISC;22NF,+80-20%,50	
C242	2401-000480	C-AL;10UF,20%,50V,GP,5X11MM,5M	
C243	2201-000483	C-CERAMIC,DISC;33PF,5%,50V,NPO	
C244	2401-000660	C-ELECTROLYTIC;CE04WTAPG50V2.2	
C250	2301-000383	C-FILM,PEF;10nF,5%,50V,TP,6x7x3.2mm,5mm	
C302	2401-000360	C-AL;100UF,20%,50V,GP,8X11MM,5	
C303	2305-000149	C-FILM;CF922N100VT104-J-40/105	
C304	2305-000285	C-FILM,MPEF;220NF,5%,100V,-,5M	
C305	2201-000259	C-CERAMIC,DISC;180PF,10%,500V,Y5P,6X4MM,	
C306	2401-000360	C-AL;100UF,20%,50V,GP,8X11MM,5	
C308	2301-000254	C-FILM,PEF;39NF,5%,50V,7.5X3.5X6.5MM,5MM	
C401	2201-000599	C-CERAMIC,DISC;560PF,10%,500V,	
⚠C402	2306-000327	C-FILM;CF922P1.6KVT632-H-25/85	
C403	2201-000406	C-CERAMIC,HIC;CK45(T)B2KV271-K	
C404	2306-000195	C-FILM,MPPF;360NF,5%,400V,26.0	
C405	2301-000213	C-FILM,PEF;220NF,5%,250V,21.5X	
C406	2201-000556	C-CERAMIC,DISC;470PF,10%,500V,	
C407	2401-001397	C-AL;470UF,20%,25V,GP,10X16MM,	
C408	2201-000556	C-CERAMIC,DISC;470PF,10%,500V,	
C409	2401-001397	C-AL;470UF,20%,25V,GP,10X16MM,	
C410	2401-002268	C-ELEC;CE04-40/105250VT2R2-MWR	
C411	2201-000556	C-CERAMIC,DISC;470PF,10%,500V,	
C412	2401-000927	C-AL;22UF,20%,250V,GP,13X20MM,	
C413	2401-002619	C-AL;47uF,20%,25V,GP,TP,5x11,5	
C414	2201-000984	C-CERAMIC,DISC;680PF,10%,2KV,Y	
C415	2303-000331	C-FILM;4.7NF,5%,630V,19.5X12X7	
C417	2301-000383	C-FILM,PEF;10nF,5%,50V,TP,6x7x3.2mm,5mm	
C501	2305-000704	C-M,POLYESTER;CFS922MTAPG250V1	
C503	2401-001232	C-AL;4.7UF,20%,250V,GP,10X12.5	
C504	2202-000121	C-CERAMIC,MLC-AXIAL;100PF,10%,	
C505	2202-000121	C-CERAMIC,MLC-AXIAL;100PF,10%,	
C506	2202-000121	C-CERAMIC,MLC-AXIAL;100PF,10%,	
C510	2401-002264	C-AL;10UF,20%,350V,GP,TP,10X20	
C518	2201-002063	C-CERAMIC,DISC;10nF,+80-20%,3KV,Y5V,TP,1	
C520	2202-000862	C-CERAMIC;CCOASL50VT391-JUP050	
C610	2301-000192	C-FILM,PEF;1NF,5%,50V,5.3X10MM	
C627	2401-000603	C-AL;1UF,20%,50V,GP,5X11MM,5MM	
C628	2401-000471	C-AL;10UF,20%,50V,BP,6X11MM,5M	
C629	2401-000027	C-AL;4.7UF,20%,50V,GP,5*11MM,5MEA	
C631	2401-000603	C-AL;1UF,20%,50V,GP,5X11MM,5MM	
C632	2401-000471	C-AL;10UF,20%,50V,BP,6X11MM,5M	
C634	2401-001998	C-AL;1000UF,20%,25V,GP,TP,10X20	
C650	2202-000796	C-CERAMIC,MLC-AXIAL;1NF,10%,50	
C651	2202-000796	C-CERAMIC,MLC-AXIAL;1NF,10%,50	
C701	2401-000480	C-AL;10UF,20%,50V,GP,5X11MM,5M	
C702	2401-000302	C-AL;100UF,20%,25V,GP,6X11MM,5	
C703	2401-000603	C-AL;1UF,20%,50V,GP,5X11MM,5MM	
C704	2401-000603	C-AL;1UF,20%,50V,GP,5X11MM,5MM	
C706	2401-000027	C-AL;4.7UF,20%,50V,GP,5*11MM,5MEA	
C707	2401-000480	C-AL;10UF,20%,50V,GP,5X11MM,5M	
C708	2401-000480	C-AL;10UF,20%,50V,GP,5X11MM,5M	
C709	2401-000027	C-AL;4.7UF,20%,50V,GP,5*11MM,5MEA	
C712	2305-000708	C-FILM;CF922N100VT154-J-40/105	
C713	2305-000355	C-FILM,MPEF;330NF,5%,63V,-,5MM	
C714	2305-000355	C-FILM,MPEF;330NF,5%,63V,-,5MM	
C715	2305-000708	C-FILM;CF922N100VT154-J-40/105	
C716	2301-000289	C-FILM,PEF;5.6NF,5%,50V,6.5X5.	
C717	2301-000289	C-FILM,PEF;5.6NF,5%,50V,6.5X5.	
⚠C801	2401-001387	C-AL;470uF,20%,250V,GP,BK,25.4x40,1	
C802	2201-000332	C-CERAMIC,AC;CK45PTAPGE250V222	
C803	2201-000332	C-CERAMIC,AC;CK45PTAPGE250V222	
C804	2303-000163	C-FILM,PPF;2.2NF,5%,800V,-,-,T	
C805	2201-000991	C-CERAMIC,HIC;CK45(T)B2KV561-K	
C806	2401-003026	C-AL;330UF,20%,200V,GP,ST,22X3	
C807	2201-000599	C-CERAMIC,DISC;560PF,10%,500V,	
C808	2401-001571	C-ELECTROLYTIC;CE04WTAPG50V47-	
C809	2401-000302	C-AL;100UF,20%,25V,GP,6X11MM,5	
C810	2401-000611	C-AL;1UF,20%,50V,WT,5X11MM,5MM	
C811	2401-000302	C-AL;100UF,20%,25V,GP,6X11MM,5	
C812	2401-000302	C-AL;100UF,20%,25V,GP,6X11MM,5	
C813	2401-002144	C-AL;47uF,20%,16V,GP,TP,5x11,5	
C815	2401-003058	C-AL;100UF,20%,200V,WT,16X25MM	
C816	2401-000164	C-ALUMINUM;1000UF,20%,25V,WT,TP,12.5X20	
C817	2202-002037	C-CERAMIC,MLC-AXIAL;100NF,+80-20	
C820	2401-000164	C-ALUMINUM;1000UF,20%,25V,WT,TP,12.5X20	
⚠C821	2201-000990	C-CERAMIC,AC;ECK-ZNS472MEX(RO)	
C822	2201-000963	C-CERAMIC;CK45Y5U400VACT102-MH	
⚠C823	2201-000990	C-CERAMIC,AC;ECK-ZNS472MEX(RO)	
C825	2301-000310	C-FILM,PEF;68NF,5%,50V,8.0X8.5	
C827	2301-000224	C-FILM,PEF;22NF,5%,50V,7.4X3.9	
C834	2401-002288	C-ELEC;CE04-55/10525VT471-MWRG	
C855	2201-000599	C-CERAMIC,DISC;560PF,10%,500V,	
C861	2401-000287	C-AL;100UF,20%,16V,WT,6X11MM,5	
C862	2401-000480	C-AL;10UF,20%,50V,GP,5X11MM,5M	
C873	2401-000302	C-AL;100UF,20%,25V,GP,6X11MM,5	
C890	2201-000374	C-CERAMIC,DISC;220pF,5%,50V,CH,TP,12.5x3	
C891	2201-000292	C-CERAMIC,DISC;1NF,10%,50V,Y5P	
C901	2401-002144	C-AL;47uF,20%,16V,GP,TP,5x11,5	
C902	2202-000796	C-CERAMIC,MLC-AXIAL;1NF,10%,50	
C903	2401-002144	C-AL;47uF,20%,16V,GP,TP,5x11,5	
C904	2202-000796	C-CERAMIC,MLC-AXIAL;1NF,10%,50	
C905	2401-001333	C-ELECTROLYTIC;CE04WTAPG50V0.4	
C906	2202-000121	C-CERAMIC,MLC-AXIAL;100PF,10%,	
C907	2401-002144	C-AL;47uF,20%,16V,GP,TP,5x11,5	
C908	2201-000573	C-CERAMIC,DISC;47PF,5%,50V,NPO	
C909	2201-000193	C-CERAMIC,DISC;10PF,0.25PF,50V	
C910	2201-000119	C-CERAMIC,DISC;100NF,+80-20%,5	
C911	2401-000302	C-AL;100UF,20%,25V,GP,6X11MM,5	
C912	2301-000383	C-FILM,PEF;10nF,5%,50V,TP,6x7x3.2mm,5mm	
C913	2202-000127	C-CERAMIC,MLC-AXIAL;10NF,+80-2	
C914	2202-000286	C-CERAMIC,MLC-AXIAL;56PF,5%,50	
C920	2202-000263	C-CERAMIC,MLC-AXIAL;470PF,10%,50V,Y5P,3.	
CB01	2306-000318	C-FILM,MPPF;220NF,20%,250V,-,2	
CD10	2401-000603	C-AL;1UF,20%,50V,GP,5X11MM,5MM	
CD11	2401-001989	C-AL;4.7uF,20%,50V,BP,TP,5x11,5	

Downloaded from www.Manualslib.com manuals search engine

Loc. No.	Code No.	Description ; Specification	Remark
CD12	2401-000480	C-AL;10UF,20%,50V,GP,5X11MM,5M	
CD26	2401-001026	C-AL;3.3UF,20%,50V,GP,5X11MM,5	
CN501B	AA39-20604A	LEAD CONNECTOR-ASSY;-,YBNH250-09,YBNH05/	
CN601	3711-002643	POST-HEADER;YW025-04(AUTO)	
CN602	3711-002644	POST-HEADER;67094-005(AUTO)	
CN701	3711-002648	POST-HEADER;67094-009(AUTO)	
CORD/H	AA61-20284A	HOLDER P CORD;PP,VO,BLK,KE-002	
CORD/P	AA39-10007Y	POWER-CORD;-,EP2/YES,SPT-2 18AWGx2C,2.4m	
CP01	2301-000224	C-FILM,PEF;22NF,5%,50V,7.4X3.9	
CP02	2301-000224	C-FILM,PEF;22NF,5%,50V,7.4X3.9	
CP03	2305-000665	C-FILM;CF922N63VT104-J-40/1053	
CP04	2305-000665	C-FILM;CF922N63VT104-J-40/1053	
CP05	2401-001496	C-AL;47UF,20%,16V,GP,5X7MM,5MM	
CU02	2202-002037	C-CERAMIC,MLC-AXIAL;100NF,+80-20	
CU06	2401-000480	C-AL;10UF,20%,50V,GP,5X11MM,5M	
CU11	2202-002037	C-CERAMIC,MLC-AXIAL;100NF,+80-20	
CU12	2202-002037	C-CERAMIC,MLC-AXIAL;100NF,+80-20	
CU13	2202-002037	C-CERAMIC,MLC-AXIAL;100NF,+80-20	
CU33	2401-001989	C-AL;4.7uF,20%,50V,BP,TP,5x11,5	
CUD06	2401-001989	C-AL;4.7uF,20%,50V,BP,TP,5x11,5	
CUD08	2301-000289	C-FILM,PEF;5.6NF,5%,50V,6.5X5.	
CUD09	2301-000160	C-FILM,PEF;12NF,5%,50V,11.0X6.	
CUD15	2401-000027	C-AL;4.7UF,20%,50V,GP,5*11MM,5MEA	
CUD18	2401-001840	C-AL;100UF,20%,16V,GP,TP,6.3X1	
CUD20	2401-001989	C-AL;4.7uF,20%,50V,BP,TP,5x11,5	
CUD21	2401-000027	C-AL;4.7UF,20%,50V,GP,5*11MM,5MEA	
CUD23	2401-001989	C-AL;4.7uF,20%,50V,BP,TP,5x11,5	
CUD24	2301-000204	C-FILM,PEF;2.7NF,5%,50V,7.4X3.	
CUD25	2301-000356	C-FILM,PEF;47nF,5%,50V,TP,7.5x4.0x6.5,5m	
CUD28	2401-001989	C-AL;4.7uF,20%,50V,BP,TP,5x11,5	
CUD29	2401-000480	C-AL;10UF,20%,50V,GP,5X11MM,5M	
CUD30	2401-000603	C-AL;1UF,20%,50V,GP,5X11MM,5MM	
CX01	2401-000480	C-AL;10UF,20%,50V,GP,5X11MM,5M	
D201	0401-000005	DIODE;1N4148TAPG	
D202	0402-000132	DIODE-RECTIFIER;1N4004,400V,1A,DO-41	
D204	0401-000005	DIODE;1N4148TAPG	
D205	0401-000005	DIODE;1N4148TAPG	
D206	0401-000005	DIODE;1N4148TAPG	
D207	0401-000005	DIODE;1N4148TAPG	
D208	0401-000005	DIODE;1N4148TAPG	
D210	0401-000005	DIODE;1N4148TAPG	
D301	0402-001105	DIODE-RECTIFIER;ERB43-04SV1,40	
D401	0402-000493	DIODE-RECTIFIER;1R5GU41,400V,1	
D402	0402-000132	DIODE-RECTIFIER;1N4004,400V,1A,DO-41	
D403	0402-000132	DIODE-RECTIFIER;1N4004,400V,1A,DO-41	
D404	0402-000540	DIODE-RECTIFIER;RU20A,600V,1.5	
D405	0402-001105	DIODE-RECTIFIER;ERB43-04SV1,40	
D503	0402-000132	DIODE-RECTIFIER;1N4004,400V,1A,DO-41	
D511	0402-001105	DIODE-RECTIFIER;ERB43-04SV1,40	
D512	0402-001105	DIODE-RECTIFIER;ERB43-04SV1,40	
D513	0402-001105	DIODE-RECTIFIER;ERB43-04SV1,40	
D601	0401-000005	DIODE;1N4148TAPG	
⚠ D801	0402-001082	DIODEBRIDGE;RBV406LFB,600V,4A	
D803	0402-000493	DIODE-RECTIFIER;1R5GU41,400V,1	
D804	0402-001105	DIODE-RECTIFIER;ERB43-04SV1,40	
D810	0402-000493	DIODE-RECTIFIER;1R5GU41,400V,1	
D812	0402-000231	DIODE-RECTIFIER;FMG-G26S,600V,	H/SINK
D814	0402-000213	DIODE-RECTIFIER;ERB12-06,600V,	
D825	0402-000493	DIODE-RECTIFIER;1R5GU41,400V,1	
D903	0401-000005	DIODE;1N4148TAPG	
D908	0401-000005	DIODE;1N4148TAPG	
D910	0401-000005	DIODE;1N4148TAPG	
⚠ D951	0402-000132	DIODE-RECTIFIER;1N4004,400V,1A,DO-41	
D962	0401-000005	DIODE;1N4148TAPG	
DU01	0401-000005	DIODE;1N4148TAPG	
DU02	0401-000005	DIODE;1N4148TAPG	
DU03	0401-000005	DIODE;1N4148TAPG	
DX01	0402-001105	DIODE-RECTIFIER;ERB43-04SV1,40	
DZ101	0403-000700	DIODE-ZENER;TZP33A,33V,31-35V,	
DZ217	0403-000563	DIODE-ZENER;MTZ9.1B,9.1V,8.57-	
DZ231	0403-000563	DIODE-ZENER;MTZ9.1B,9.1V,8.57-	
DZ250	0403-000662	DIODE-ZENER;MTZ3.0B,3.0V,3.01-	
DZ302	0403-000660	DIODE-ZENER;MTZ22A,22V,20.15-2	
DZ303	0403-000660	DIODE-ZENER;MTZ22A,22V,20.15-2	
DZ304	0403-000660	DIODE-ZENER;MTZ22A,22V,20.15-2	
DZ305	0403-000494	DIODE-ZENER;MTZ39B,39V,35.36/3	
DZ306	0403-000700	DIODE-ZENER;TZP33A,33V,31-35V,	

Loc. No.	Code No.	Description ; Specification	Remark
DZ401	0403-000300	DIODE-ZENER;MTZ8.2B,7.78-.19V,	
DZ402	0403-000355	DIODEZENER;UZ5.1BSB,4.97~5.17V,0.5UA,500	
DZ505	0403-000563	DIODE-ZENER;MTZ9.1B,9.1V,8.57-	
DZ601	0403-000563	DIODE-ZENER;MTZ9.1B,9.1V,8.57-	
DZ612	0403-000656	DIODE-ZENER;MTZ15C,15V,14.35-1	
DZ613	0403-000656	DIODE-ZENER;MTZ15C,15V,14.35-1	
DZ621	0403-000656	DIODE-ZENER;MTZ15C,15V,14.35-1	
DZ622	0403-000656	DIODE-ZENER;MTZ15C,15V,14.35-1	
DZ707	0403-000563	DIODE-ZENER;MTZ9.1B,9.1V,8.57-	
DZ708	0403-000563	DIODE-ZENER;MTZ9.1B,9.1V,8.57-	
DZ801	1405-001036	VARISTOR;430V,2500A,14x8.5mm,TP	
DZ802	1405-001036	VARISTOR;430V,2500A,14x8.5mm,TP	
DZ803	0403-000300	DIODE-ZENER;MTZ8.2B,7.78-.19V,	
DZ804	0403-000296	DIODE-ZENER;EQA02-06A/MTZ5.6B(	
DZ805	0403-000296	DIODE-ZENER;EQA02-06A/MTZ5.6B(	
DZ806	0403-000562	DIODE ZENER;MTZ7.5B,7.5V,7.07-7-45V,500M	
DZ807	0403-000297	DIODE-ZENER;EQA02-06D/MTZ6.2B(	
DZ808	0403-000296	DIODE-ZENER;EQA02-06A/MTZ5.6B(	
DZ810	0401-000005	DIODE;1N4148TAPG	
DZ864	0403-000296	DIODE-ZENER;EQA02-06A/MTZ5.6B(	
DZ901	0403-000355	DIODEZENER;UZ5.1BSB,4.97~5.17V,0.5UA,500	
DZ902	0403-000562	DIODE ZENER;MTZ7.5B,7.5V,7.07-7-45V,500M	
DZ905	0403-000297	DIODE-ZENER;EQA02-06D/MTZ6.2B(	
DZ906	0403-000297	DIODE-ZENER;EQA02-06D/MTZ6.2B(	
DZ907	0403-000297	DIODE-ZENER;EQA02-06D/MTZ6.2B(	
DZ908	0403-000297	DIODE-ZENER;EQA02-06D/MTZ6.2B(	
DZ910	0403-000297	DIODE-ZENER;EQA02-06D/MTZ6.2B(	
DZX01	0403-000667	DIODE-ZENER;MTZ6.8A,6.8V,6.29-	
⚠ F801	3601-001012	FUSE-FERRULE;250V,4A,SLOW-BLOW	
F801A	3602-000114	FUSE-HOLDER;-,-,30MOHM	
F801B	3602-000114	FUSE-HOLDER;-,-,30MOHM	
GT102	AA39-20010B	LEAD-CONNECTOR,ASSY;-,YFH800-01,500MM,1P	
IC201	1204-001174	ICHOR/VERPROCESS;TDA8373A,DIP,	
IC202	1204-000506	IC-LINEAR;LA7510SIP9P	
IC301	1204-000517	IC-LINEAR;LA7845SIPVERTICALAMP	H/SINK
IC501	1201-001330	IC-VIDEO;TDA6108JF,ZSIP,9,SINGLE,-	H/SINK
IC603	1201-001308	IC-POWERAMP;7266,ZIP,15P,-,DUAL,26dB,PL	H/SINK
IC701	1204-001455	IC-VOLUME/TONECONT.;TDA7449,DIP,20P,300	
IC801	1203-001482	IC-PWMCONTROLLER;3S1265R,TO-3P,5P,210,P	H/SINK
IC802	1203-000644	IC-POSI.FIXEDREG.;7630,SIP,10P	H/SINK
⚠ IC851	0604-001038	PHOTOCOUPLER;TR,130-260%,200MW	
IC852	1203-001217	IC-POST,ADJUSTREG;431,T0-92,3P,4.58MIL,P	
IC853	1203-001225	IC-POSI.FIXEDREG.;78R09,TO-220,4P,-,PLA	
IC901	AA13-00017A	IC-MCU;-,Z9036512PSC-R4127	
IC902	1103-001106	IC-EEPROM;24C080,1028x8BIT,DIP,8P,300MIL	
ICD01	1209-001116	IC-ETC,LINEAR;CXA2104S,DIP,30P,-,PLASTI	
ICP01	1209-000214	IC-DELAYLINE;TDA4665,DIP,16P,300MIL,PLA	
J258	2001-000780	R-CARBON;470ohm,5%,1/8W,AA,TP,1.8x3.2mm	
JA701	3722-001103	JACKRCA;5P	
L102	2701-000142	INDUCTOR-AXIAL;1UH,10%,2.5X3.4	
L103	2701-000207	INDUCTOR-AXIAL;56UH,5%,2.5X3.4	
L104	2701-000114	INDUCTOR-AXIAL;10UH,10%,2.5X3.	
L201	2701-000127	INDUCTOR-AXIAL;15UH,10%,2.5X3.	
L202	3301-000287	CORE-FERRITEBEAD;AA,3.5X1.0X6.	
L203	3301-000287	CORE-FERRITEBEAD;AA,3.5X1.0X6.	
L204	2701-000114	INDUCTOR-AXIAL;10UH,10%,2.5X3.	
L205	2701-000114	INDUCTOR-AXIAL;10UH,10%,2.5X3.	
L206	2701-000114	INDUCTOR-AXIAL;10UH,10%,2.5X3.	
L237	2701-000114	INDUCTOR-AXIAL;10UH,10%,2.5X3.	
L401	AA27-30001B	COIL-LINEARITY;-,195UH,QIC1010	
L405	2701-000142	INDUCTOR-AXIAL;1UH,10%,2.5X3.4	
L406	2901-000297	FILTER-EMI ON BOARD;-,3A,-,-,3.5x5,TP,-	
L602	3301-000287	CORE-FERRITEBEAD;AA,3.5X1.0X6.	
L710	2701-000114	INDUCTOR-AXIAL;10UH,10%,2.5X3.	
L802	AA29-30002F	FILTER-LINENOISE;-,6MH,2.45A,-	
L807	3301-000287	CORE-FERRITEBEAD;AA,3.5X1.0X6.	
L808	3301-001223	CORE-FERRITE BEAD;AB,-,3.5X5X0.8MM,-,TP,	
L809	3301-001223	CORE-FERRITE BEAD;AB,-,3.5X5X0.8MM,-,TP,	
L810	AA27-10002Y	COIL-CHOKE;-,100UH,K,10,700MA,	
L811	2901-000297	FILTER-EMI ON BOARD;-,3A,-,-,3.5x5,TP,-	
L812	2901-000297	FILTER-EMI ON BOARD;-,3A,-,-,3.5x5,TP,-	
L814	2901-000297	FILTER-EMI ON BOARD;-,3A,-,-,3.5x5,TP,-	
L815	3301-000287	CORE-FERRITEBEAD;AA,3.5X1.0X6.	
L816	2701-001032	INDUCTOR-AXIAL;100UH,10%,5X14MM	
L864	3301-000287	CORE-FERRITEBEAD;AA,3.5X1.0X6.	
L901	2701-000114	INDUCTOR-AXIAL;10UH,10%,2.5X3.	
L902	2701-000114	INDUCTOR-AXIAL;10UH,10%,2.5X3.	

Downloaded from www.Manualslib.com manuals search engine

Loc. No.	Code No.	Description ; Specification	Remark
L903	3301-000287	CORE-FERRITEBEAD;AA,3.5X1.0X6.	
LA01	AA27-10002X	COIL-CHOKE;-,43UH,K,10,1A,T,43	
LD901	AA96-30001B	ASSY-LED,GUIDE;-,AA61-50055A,D	
⚠LK803	AA29-30002F	FILTER-LINENOISE;-,6MH,2.45A,-	
LUD01	2701-000106	INDUCTOR-AXIAL;1.5uH,10%,2.8x7mm	
NT801	1404-001045	THERMISTOR NTC;4.7OHM,15%,2900K,35.0MW,T	
PUD01	1404-000208	POSISTOR;PTH631D02BF7ROM140TDE	
Q101	0501-000436	TR-SMALLSIGNAL;KTC3197,NPN,30V	
Q201	0501-000389	TRANSISTOR;KSC815-Y(TAPG)/YTAM	
Q204	0501-000283	TRANSISTOR;KSA539-Y(TAPG)/YTAM	
Q401	0502-001115	TR-POWER;KSC5386,NPN,50W,TO-3PF,ST,8	
Q402	0501-000369	TRANSISTOR;KSC2331-Y(TAPG)	
Q601	0501-000389	TRANSISTOR;KSC815-Y(TAPG)/YTAM	
Q604	0501-000389	TRANSISTOR;KSC815-Y(TAPG)/YTAM	
Q901	0504-000123	TR-DIGITAL;KSR1010,NPN,300MW,1	
Q902	0501-000389	TRANSISTOR;KSC815-Y(TAPG)/YTAM	
Q951	0501-000369	TRANSISTOR;KSC2331-Y(TAPG)	
QP01	0501-000389	TRANSISTOR;KSC815-Y(TAPG)/YTAM	
QP02	0501-000389	TRANSISTOR;KSC815-Y(TAPG)/YTAM	
QU03	0504-000123	TR-DIGITAL;KSR1010,NPN,300MW,1	
QU05	0501-000283	TRANSISTOR;KSA539-Y(TAPG)/YTAM	
QX01	0501-000283	TRANSISTOR;KSA539-Y(TAPG)/YTAM	
R102	2001-000591	R-CARBON;3.3KOHM,5%,1/8W,AA,TP	
R103	2001-000660	R-CARBON;33KOHM,5%,1/8W,AA,TP,	
R104	2001-000221	R-CARBON;1.2KOHM,5%,1/8W,AA,TP	
R107	2001-000281	R-CARBON;100OHM,5%,1/8W,AA,TP,	
R108	2001-000281	R-CARBON;100OHM,5%,1/8W,AA,TP,	
R109	2001-000938	R-METAL;68ohm,5%,1/8W,AA,TP,1.8x3.2mm	
R111	2001-000793	R-CARBON;47OHM,5%,1/8W,AA,TP,1	
R112	2001-000281	R-CARBON;100OHM,5%,1/8W,AA,TP,	
R113	2001-000577	R-CARBON;2KOHM,5%,1/8W,AA,TP,1	
R114	2001-000221	R-CARBON;1.2KOHM,5%,1/8W,AA,TP	
R120	2001-000490	R-CARBON;200OHM,5%,1/8W,AA,TP,	
R200	2001-000577	R-CARBON;2KOHM,5%,1/8W,AA,TP,1	
R202	2001-000005	R-CARBON;390OHM,5%,1/8W,AA,TP,	
R204	2001-000793	R-CARBON;47OHM,5%,1/8W,AA,TP,1	
R205	2001-000325	R-CARBON;120OHM,5%,1/8W,AA,TP,	
R206	2001-000281	R-CARBON;100OHM,5%,1/8W,AA,TP,	
R207	2001-000325	R-CARBON;120OHM,5%,1/8W,AA,TP,	
R209	2001-000281	R-CARBON;100OHM,5%,1/8W,AA,TP,	
R210	2001-000281	R-CARBON;100OHM,5%,1/8W,AA,TP,	
R211	2001-000766	R-CARBON;43KOHM,5%,1/8W,AA,TP,	
R212	2001-000617	R-CARBON;3.9MOHM,5%,1/8W,AA,TP,1.8X3.2M	
R213	2001-000429	R-CARBON;1Kohm,5%,1/8W,AA,TP,1.8x3.2mm	
R214	2001-000281	R-CARBON;100OHM,5%,1/8W,AA,TP,	
R215	2001-000281	R-CARBON;100OHM,5%,1/8W,AA,TP,	
R216	2001-000281	R-CARBON;100OHM,5%,1/8W,AA,TP,	
R217	2001-000273	R-CARBON;100KOHM,5%,1/8W,AA,TP	
R219	2001-000679	R-CARBON;36KOHM,5%,1/8W,AA,TP,	
R222	2001-000780	R-CARBON;470ohm,5%,1/8W,AA,TP,1.8x3.2mm	
R223	2001-000252	R-CARBON;1.6KOHM,5%,1/8W,AA,TP	
R224	2001-000734	R-CARBON;4.7KOHM,5%,1/8W,AA,TP	
R226	2001-000273	R-CARBON;100KOHM,5%,1/8W,AA,TP	
R228	2004-001089	R-METAL;560KOHM,5%,1/8W,AA,TP,	
R229	2001-000938	R-METAL;68ohm,5%,1/8W,AA,TP,1.8x3.2mm	
R230	2001-000591	R-CARBON;3.3KOHM,5%,1/8W,AA,TP	
R231	2001-000281	R-CARBON;100OHM,5%,1/8W,AA,TP,	
R232	2001-000440	R-CARBON;1OHM,5%,1/8W,AA,TP,1.	
R233	2001-000539	R-CARBON;24KOHM,5%,1/8W,AA,TP,	
R234	2001-000008	R-CARBON;15KOHM,5%,1/8W,AA,TP,	
R235	2001-000522	R-CARBON;22KOHM,5%,1/8W,AA,TP,	
R237	2004-001914	R-METAL;39KOHM,2%,1/8W,AA,TP,1	
R239	2001-000864	R-CARBON;56Kohm,5%,1/8W,AA,TP,1.8x3.2mm	
R245	2001-000273	R-CARBON;100KOHM,5%,1/8W,AA,TP	
R250	2001-000066	R-CARBON(S);10KOHM,5%,1/2W,AA,	
R251	2001-000531	R-CARBON;240KOHM,5%,1/8W,AA,TP,1.8X3.2M	
R252	2001-001062	R-CARBON(S);10MOHM,5%,1/2W,AA,	
R253	2001-001411	R-CARBON;5.6Mohm,5%,1/8W,AA,TP,1.7x3.2m	
R260	2001-000832	R-CARBON;510OHM,5%,1/8W,AA,TP,	
R301	2001-001172	R-CARBON(S);620OHM,5%,1/2W,AA,TP,2.4X6.4	
R302	2001-001172	R-CARBON(S);620OHM,5%,1/2W,AA,TP,2.4X6.4	
R303	2001-000016	R-CARBON(S);1OHM,5%,1/2W,AA,TP	
R304	2003-002014	R-METALOXIDE(S);0.6OHM,5%,2W,A	
R306	2003-002069	R-METALOXIDE;470OHM,5%,2W,AF,T	
R309	2003-002069	R-METALOXIDE;470OHM,5%,2W,AF,T	
R403	2001-001114	R-CARBON(S);270OHM,5%,1/2W,AA,	
R405	2003-000540	R-METALOXIDE(S);1KOHM,5%,2W,AD	

Loc. No.	Code No.	Description ; Specification	Remark
R406	2003-002008	R-METAL OXIDE(S);18KOHM,5%,2W,AF,TP,3.9X	
R407	2001-000022	R-CARBON(S);33OHM,5%,1/2W,AA,T	
R408	2004-001390	R-METAL(S);1KOHM,2%,1/2W,AA,TP	
⚠R409	2008-001011	R-FUSIBLE(S);0.18OHM,10%,2W,AF	
⚠R410	2008-001011	R-FUSIBLE(S);0.18OHM,10%,2W,AF	
R411	2004-001373	R-METAL,FILM;RM1/2T100K-F	
⚠R412	2004-001373	R-METAL,FILM;RM1/2T100K-F	
R413	2003-002101	R-METAL OXIDE;82OHM,5%,2W,AF,TP,4X12MM	
R415	2003-002007	R-METAL OXIDE(S);4.7KOHM,5%,2W,AF,TP,3.9	
R416	2001-000613	R-CARBON;3.9KOHM,5%,1/8W,AA,TP	
⚠R418	2008-000254	R-FUSIBLE(S);0.68OHM,5%,2W,AF,	
R419	2008-000252	R-FUSIBLE(S);0.47OHM,10%,1/2W,	
R501	2001-000490	R-CARBON;200OHM,5%,1/8W,AA,TP,	
R502	2001-000490	R-CARBON;200OHM,5%,1/8W,AA,TP,	
R503	2001-000490	R-CARBON;200OHM,5%,1/8W,AA,TP,	
R504	2001-000449	R-CARBON;2.2KOHM,5%,1/8W,AA,TP	
R505	2001-000449	R-CARBON;2.2KOHM,5%,1/8W,AA,TP	
R506	2001-000449	R-CARBON;2.2KOHM,5%,1/8W,AA,TP	
R517	2002-001009	R-COMPOSITION;2.7KOHM,10%,1/2W,AA,TP,3.7	
R518	2002-001009	R-COMPOSITION;2.7KOHM,10%,1/2W,AA,TP,3.7	
R519	2002-001009	R-COMPOSITION;2.7KOHM,10%,1/2W,AA,TP,3.7	
R520	2001-000096	R-CARBON(S);1MOHM,5%,1/2W,AA,T	
R523	2008-000299	R-FUSIBLE;RF2RT470-J	
R524	2002-001006	R-COMPOSITION;RC1/2T4.7KK/ERC-	
R525	2008-000266	R-FUSIBLE(S);1OHM,5%,2W,AF,TP,	
R526	2008-000254	R-FUSIBLE(S);0.68OHM,5%,2W,AF,	
R601	2001-000429	R-CARBON;1Kohm,5%,1/8W,AA,TP,1.8x3.2mm	
R602	2001-000290	R-CARBON;10KOHM,5%,1/8W,AA,TP,	
R603	2004-000195	R-METAL;100Kohm,1%,1/8W,AA,TP,1.8x3.2m	
R606	2001-000281	R-CARBON;100OHM,5%,1/8W,AA,TP,	
R607	2001-000429	R-CARBON;1Kohm,5%,1/8W,AA,TP,1.8x3.2mm	
R608	2001-000281	R-CARBON;100OHM,5%,1/8W,AA,TP,	
R610	2001-000429	R-CARBON;1Kohm,5%,1/8W,AA,TP,1.8x3.2mm	
R617	2001-000429	R-CARBON;1Kohm,5%,1/8W,AA,TP,1.8x3.2mm	
R618	2001-000290	R-CARBON;10KOHM,5%,1/8W,AA,TP,	
R619	2001-000281	R-CARBON;100OHM,5%,1/8W,AA,TP,	
R622	2001-000429	R-CARBON;1Kohm,5%,1/8W,AA,TP,1.8x3.2mm	
R623	2001-000290	R-CARBON;10KOHM,5%,1/8W,AA,TP,	
R624	2001-000281	R-CARBON;100OHM,5%,1/8W,AA,TP,	
R707	2001-000429	R-CARBON;1Kohm,5%,1/8W,AA,TP,1.8x3.2mm	
R708	2001-000085	R-CARBON(S);100KOHM,5%,1/2W,AA	
R709	2001-000429	R-CARBON;1Kohm,5%,1/8W,AA,TP,1.8x3.2mm	
R713	2001-000577	R-CARBON;2KOHM,5%,1/8W,AA,TP,1	
R714	2001-000577	R-CARBON;2KOHM,5%,1/8W,AA,TP,1	
R715	2001-001187	R-CARBON(S);75OHM,5%,1/2W,AA,T	
R719	2001-000281	R-CARBON;100OHM,5%,1/8W,AA,TP,	
R720	2001-000281	R-CARBON;100OHM,5%,1/8W,AA,TP,	
R802	2001-001150	R-CARBON(S);470KOHM,5%,1/2W,AA	
R803	2003-000994	R-METALOXIDE(S);33KOHM,5%,2W,AF,TP,3.9X1	
R804	2003-000994	R-METALOXIDE(S);33KOHM,5%,2W,AF,TP,3.9X1	
⚠R805	2002-001013	R-COMPOSITION;4.7MOHM,10%,1/2W,AA,TP,3.7	
R806	2001-001071	R-CARBON(S);12KOHM,5%,1/2W,AA,	
R807	2001-001071	R-CARBON(S);12KOHM,5%,1/2W,AA,	
R808	2004-004089	R-METAL;123KOHM,1%,1/2W,AA,TP,2.5X6.5	
R810	2001-001150	R-CARBON(S);470KOHM,5%,1/2W,AA	
R811	2001-001153	R-CARBON(S);47OHM,5%,1/2W,AA,T	
R814	2001-001050	R-CARBON(S);1.5KOHM,5%,1/2W,AA	
R819	2001-001178	R-CARBON(S);680OHM,5%,1/2W,AA,	
R820	2003-001047	R-METAL OXIDE(S);68OHM,5%,2W,AF,TP,3.9X1	
R822	2001-000273	R-CARBON;100KOHM,5%,1/8W,AA,TP	
R826	2001-001125	R-CARBON(S);300KOHM,5%,1/2W,AA	
R827	2001-001093	R-CARBON(S);2.2KOHM,5%,1/2W,AA	
R828	2004-001983	R-METAL;2.49KOHM,1%,1/2W,AA,TP,2.4X6.4	
R830	2008-001011	R-FUSIBLE(S);0.18OHM,10%,2W,AF	
R831	2008-001011	R-FUSIBLE(S);0.18OHM,10%,2W,AF	
R832	2003-000458	R-METALOXIDE(S);100OHM,5%,2W,A	
R833	2003-001035	R-METALOXIDE(S);27OHM,5%,2W,AF	
R836	2008-000266	R-FUSIBLE(S);1OHM,5%,2W,AF,TP,	
R861	2008-001033	R-FUSIBLE(S);10OHM,5%,2W,AF,TP	
R862	2008-001033	R-FUSIBLE(S);10OHM,5%,2W,AF,TP	
R901	2001-000793	R-CARBON;47OHM,5%,1/8W,AA,TP,1	
R902	2001-000429	R-CARBON;1Kohm,5%,1/8W,AA,TP,1.8x3.2mm	
R903	2001-000281	R-CARBON;100OHM,5%,1/8W,AA,TP,	
R904	2001-000281	R-CARBON;100OHM,5%,1/8W,AA,TP,	
R905	2001-000290	R-CARBON;10KOHM,5%,1/8W,AA,TP,	
R906	2001-000472	R-CARBON;2.7KOHM,5%,1/8W,AA,TP	
R907	2001-000995	R-CARBON;820OHM,5%,1/8W,AA,TP,	

Downloaded from www.Manualslib.com manuals search engine

Loc. No.	Code No.	Description ; Specification	Remark
R908	2001-000232	R-CARBON;1.3KOHM,5%,1/8W,AA,TP	
R909	2001-000449	R-CARBON;2.2KOHM,5%,1/8W,AA,TP	
R911	2001-000290	R-CARBON;10KOHM,5%,1/8W,AA,TP,	
R912	2001-000832	R-CARBON;510OHM,5%,1/8W,AA,TP,	
R914	2001-000490	R-CARBON;200OHM,5%,1/8W,AA,TP,	
R915	2001-000241	R-CARBON;1.5KOHM,5%,1/8W,AA,TP	
R918	2001-000429	R-CARBON;1Kohm,5%,1/8W,AA,TP,1.8x3.2mm	
R920	2001-000734	R-CARBON;4.7KOHM,5%,1/8W,AA,TP	
R921	2001-001062	R-CARBON(S);10MOHM,5%,1/2W,AA,	
R922	2701-000114	INDUCTOR-AXIAL;10UH,10%,2.5X3.	
R923	2701-000114	INDUCTOR-AXIAL;10UH,10%,2.5X3.	
R924	2001-000449	R-CARBON;2.2KOHM,5%,1/8W,AA,TP	
R925	2001-000449	R-CARBON;2.2KOHM,5%,1/8W,AA,TP	
R926	2001-000449	R-CARBON;2.2KOHM,5%,1/8W,AA,TP	
R927	2001-000290	R-CARBON;10KOHM,5%,1/8W,AA,TP,	
R928	2004-001234	R-METAL;75KOHM,5%,1/8W,AA,TP,1	
R930	2001-000832	R-CARBON;510OHM,5%,1/8W,AA,TP,	
R931	2001-000010	R-CARBON;68Kohm,5%,1/8W,AA,TP,1.8x3.2mm	
R932	2001-001062	R-CARBON(S);10MOHM,5%,1/2W,AA,	
R935	2001-000832	R-CARBON;510OHM,5%,1/8W,AA,TP,	
R951	2001-000290	R-CARBON;10KOHM,5%,1/8W,AA,TP,	
R952	2001-000472	R-CARBON;2.7KOHM,5%,1/8W,AA,TP	
R953	2001-000947	R-CARBON;7.5KOHM,5%,1/8W,AA,TP	
R956	2001-000290	R-CARBON;10KOHM,5%,1/8W,AA,TP,	
R957	2001-000117	R-CARBON(S);68ohm,5%,1/2W,AA,TP,2.4x6.4m	
R958	2001-000241	R-CARBON;1.5KOHM,5%,1/8W,AA,TP	
R959	2001-000734	R-CARBON;4.7KOHM,5%,1/8W,AA,TP	
R961	2001-000766	R-CARBON;43KOHM,5%,1/8W,AA,TP,	
R962	2001-000290	R-CARBON;10KOHM,5%,1/8W,AA,TP,	
R964	2004-001390	R-METAL(S);1KOHM,2%,1/2W,AA,TP	
R965	2001-000273	R-CARBON;100KOHM,5%,1/8W,AA,TP	
R966	2001-000290	R-CARBON;10KOHM,5%,1/8W,AA,TP,	
RA01	2003-000458	R-METALOXIDE(S);1000HM,5%,2W,A	
RA02	2003-000458	R-METALOXIDE(S);1000HM,5%,2W,A	
RL801	3501-001040	RELAYPOWER;12VDC,500MW,10A,1FO	
RM901	AA59-60001U	MODULE-REMOCON;-,ORC-50VF,38KH	
RN01	2001-000995	R-CARBON;820OHM,5%,1/8W,AA,TP,	
RP01	2001-000429	R-CARBON;1Kohm,5%,1/8W,AA,TP,1.8x3.2mm	
RP02	2001-000429	R-CARBON;1Kohm,5%,1/8W,AA,TP,1.8x3.2mm	
RP03	2001-000429	R-CARBON;1Kohm,5%,1/8W,AA,TP,1.8x3.2mm	
RP04	2001-000429	R-CARBON;1Kohm,5%,1/8W,AA,TP,1.8x3.2mm	
⚠ RU01	2002-001010	R-COMPOSITION;1.8MOHM,10%,1/2W,AA,TP,3	
RU03	2001-000290	R-CARBON;10KOHM,5%,1/8W,AA,TP,	
RU04	2001-000577	R-CARBON;2KOHM,5%,1/8W,AA,TP,1	
RU05	2001-000577	R-CARBON;2KOHM,5%,1/8W,AA,TP,1	
RU06	2001-000577	R-CARBON;2KOHM,5%,1/8W,AA,TP,1	
RU07	2001-000429	R-CARBON;1Kohm,5%,1/8W,AA,TP,1.8x3.2mm	
RU08	2001-000005	R-CARBON;390OHM,5%,1/8W,AA,TP,	
RU09	2001-000005	R-CARBON;390OHM,5%,1/8W,AA,TP,	
RU10	2001-000005	R-CARBON;390OHM,5%,1/8W,AA,TP,	
RU12	2001-000290	R-CARBON;10KOHM,5%,1/8W,AA,TP,	
RU13	2001-000613	R-CARBON;3.9KOHM,5%,1/8W,AA,TP	
RU14	2004-001989	R-METAL;620OHM,5%,1/8W,AA,TP,1	
RU15	2004-001989	R-METAL;620OHM,5%,1/8W,AA,TP,1	
RU16	2004-001989	R-METAL;620OHM,5%,1/8W,AA,TP,1	
RU17	2001-000429	R-CARBON;1Kohm,5%,1/8W,AA,TP,1.8x3.2mm	
RU18	2001-000429	R-CARBON;1Kohm,5%,1/8W,AA,TP,1.8x3.2mm	
RU19	2001-000429	R-CARBON;1Kohm,5%,1/8W,AA,TP,1.8x3.2mm	
RU20	2001-000429	R-CARBON;1Kohm,5%,1/8W,AA,TP,1.8x3.2mm	
RUD03	2001-000281	R-CARBON;100OHM,5%,1/8W,AA,TP,	
RUD04	2001-000281	R-CARBON;1000HM,5%,1/8W,AA,TP,	
RUD08	2001-000435	R-CARBON;1MOHM,5%,1/8W,AA,TP,1	
RUD09	2001-000273	R-CARBON;100KOHM,5%,1/8W,AA,TP	
RUD13	2004-001165	R-METAL;62Kohm,1%,1/8W,AA,TP,1.8x3.2mm	
RUD24	2001-000591	R-CARBON;3.3KOHM,5%,1/8W,AA,TP	
RUD25	2001-000007	R-CARBON;3KOHM,5%,1/8W,AA,TP,1	
RUD30	2001-000613	R-CARBON;3.9KOHM,5%,1/8W,AA,TP	
RUD40	2001-000429	R-CARBON;1Kohm,5%,1/8W,AA,TP,1.8x3.2mm	
RUD41	2001-000947	R-CARBON;7.5KOHM,5%,1/8W,AA,TP	
RUD42	2001-000429	R-CARBON;1Kohm,5%,1/8W,AA,TP,1.8x3.2mm	
RUD43	2001-000947	R-CARBON;7.5KOHM,5%,1/8W,AA,TP	
⚠ RX01	2001-000397	R-CARBON;180KOHM,5%,1/8W,AA,TP	
⚠ RX02	2001-000522	R-CARBON;22KOHM,5%,1/8W,AA,TP,	
⚠ RX03	2001-000522	R-CARBON;22KOHM,5%,1/8W,AA,TP,	
⚠ RX04	2001-000766	R-CARBON;43KOHM,5%,1/8W,AA,TP,	
⚠ RX05	2001-000313	R-CARBON;11KOHM,5%,1/8W,AA,TP,	
SF101	2904-000287	FILTER-SAW AV;45.75MHz,SIP5P,ST,12.5dB,	

Loc. No.	Code No.	Description ; Specification	Remark
SF102	2904-000289	FILTER-SAWAV;45.75MHZ,SIP5P,ST	
SW901	3404-000244	SWITCH-TACT;15V,20MA,90-170GF,	
SW902	3404-000244	SWITCH-TACT;15V,20MA,90-170GF,	
SW903	3404-000244	SWITCH-TACT;15V,20MA,90-170GF,	
SW904	3404-000244	SWITCH-TACT;15V,20MA,90-170GF,	
SW905	3404-000244	SWITCH-TACT;15V,20MA,90-170GF,	
SWN01	3404-001004	SWITCH TACT;12V,50MA,160GF8.4X22.7MM	
T201	AA26-10005E	TRANS-IF;-,7MM,IF,0.136UH,7MM,	
T403	AA26-50001B	HORIZ.DRIVE;-,7.1MH,102UH,10-2	
⚠ T444	AA26-30005Y	TRANS-FLYBACK;-,FSV-20B001A,20,125V	
⚠ T801	AA26-20007Z	TRANS-SWITCHING;-,90~260,130/15.5/12/8V,	
⚠ TU01	AA40-10006U	TUNER-F/S;TECC1070PG31A(S)	
⚠ V999	3704-000110	SOCKET-CRT;29.1PI,1.0~2.3KVD,I	
X202	2801-003298	CRYSTAL-UNIT;3.579545MHZ,30PPM	
X901	2801-003224	CRYSTAL-UNIT;32.768KHZ,20PPM,2	
Z201	2903-001022	FILTER-CERAMIC;TR,4.5MHZ	
Z601	2903-000135	FILTER-CERAMIC;BP,4.5MHZ	

ASSY-PCB,A/V

A/A-V	LA97-90003N	ASSY-PCB,A/V;-,KCT52A,K51A-,-,S
01VER	AA41-10329B	PCB-F/AV;KV2,1,FR-1,245x245x1.6T
CE60	2401-000480	C-AL;10UF,20%,50V,GP,5X11MM,5M
CE61	2401-000480	C-AL;10UF,20%,50V,GP,5X11MM,5M
CN602B	AA39-20069D	LEAD-CONNECTOR,ASSY;-,YBNH025-
JB01	3722-000500	JACK-RCA;3P(S),-,-,AG
JE60	3722-000143	JACK-PHONE;1P,3.4MM,-,MBAG
LEAD/C	AA39-20112D	LEAD-CONNECTOR,ASSY;-,YBNH025-
RE60	2001-001077	R-CARBON(S);150OHM,5%,1/2W,AA,
RE61	2001-001077	R-CARBON(S);150OHM,5%,1/2W,AA,

ASSY-CRT

A/CRTP	3Y70-00505-010	ASSY-CRT;TC2065S/X20(SDM)
CRT	AA03-10030W	CRT-COLOR;-,A51KRE83X(D),+380mG,21,90de
D-Y	L7000-0004	DEFL-YOKE(SEMSA);DSE-2192GL
⚠ C-Y	AA27-00002A	MAGNET-CONVERGENCE;JH291-SC-OB,29.1M
SPACER	AA63-60028A	SPACER-DY;-,NEOPRENE,-,BLK,V0W

REMOCON

RMT	AA59-10112D	REMOCON;DP,TM58,-,-,-,-,-,AA59-10109D,

ASSY-CABINET,(COM)

A/FRNT	AA92-30152A	ASSY-CABINET,FRONT;TXJ2066/U.S.A
B/C	L2001-0184-000	BACK-CABINET;CT-5345/46HIPSVOB
BADGE	AA64-70015A	BADGE-BRAND;-,AL,-,L45,SILVER,
F/C	L2001-0183-025	CABINET-FRONT;CT-5345HIPSVOBLK
AC+BC	AA65-30008A	CLAMP-CORD;-,PE,HB,BLK,-,-
FBT	AA65-30109A	CLAMP-FBT;NYLON-66,V2,BLK,-,-,-
CWIRE1	AA65-30018A	CLAMP-WIRE;-,NYLON6.6,-,-,DATL
CWIRE4	AA65-30105A	CLAMP-WIRE;NYLON 66N,VO,NTR,15MM
D-COIL	AA27-20003G	COIL-DEGAUSSING;S/VOLTAGE21
HDCOIL	L9400-0002	HOLDER-DEGAUSSING;20POLYVINIL
INDLED	AA64-40255A	INDICATOR-LED;-,ACRYL,HB,-,-,5
INLAYF	AA64-60278G	INLAY-AV;-,KCT52A,PS,T0.5,BLK,
INLAYB	AA64-60417A	INLAY-BACK;5346.46,KCT52BL/G,P
KC	L4082-0262-000	KNOB-CONTROL;ABSHBBLKCT-5346/46
KP	L4083-0263-000	KNOB-POWER;ABSHBBLKPRINTGREEN6345/6
L/SPK	AA39-20103A	LEAD-CONNECTOR,ASSY;-,YSH025-0
CRT+CF	AA60-10050R	SCREW-ASSY;WC,HH,+M5,L31.5,SWR
PA+CF	AA60-10002A	SCREW-TAPPING;-,RH,+,M4,L12,ZP
CB+CF	6002-000514	SCREW-TAPPING;RH,+,2,M4,L15,ZP
CB+RCA	6002-000514	SCREW-TAPPING;RH,+,2,M4,L15,ZP
SPK+CF	6002-000514	SCREW-TAPPING;RH,+,2,M4,L15,ZP
	6002-000514	SCREW-TAPPING;RH,+,2,M4,L15,ZP
SPK	3001-000003	SPEAKER;3W,16ohm,88+-2dB,180+-36Hz
SPRING	AA61-60003T	SPRING-CS;-,-,SUS304,0.5,OD7,H
STOPER	AA61-40053A	STOPPER-PCB;-,HIPS,HB,-,WHT,AL
WINDOW	AA64-40254A	WINDOW-REMOCON;-,PC,-,-,-,5345

ASSY-ACCESSORY

I/B	AA68-00057A	MANUAL-USERS;K51A,ENG,-,B5,W/P 100(G),'Ì

Downloaded from www.Manualslib.com manuals search engine

6-4 TXJ2554 (TXJ2567 and TXJ2554 Dissimilar Parts)

Loc. No.	Code No.	Description ; Specification	Remark
		ASSY-PCB,MAIN(COM)	
*	AA97-10062A	ASSY-PCB,MAIN(COM);TXJ2554/XAA,K51A,U.S	
	3722-001103	JACKRCA;5P	
		REMOCON	
*	AA59-10113B	REMOCON;DP,TM59,-,-,-,-,-,AA59-10110B,	
		ASSY-CABINET	
*	AA90-70111A	ASSY-CABINET;CT-633B,TXH2555/XAA	
	6002-000516	SCREW-TAPPING;RH,+,2,M4,L20,Z	
	AA64-31138A	CABINET-BACK;HIPS VO BLK CT-6	
	6002-000512	SCREW-TAPPING;RH,+,2,M4,L12,Z	

Loc. No.	Code No.	Description ; Specification	Remark
		ASSY-CABINET,FRONT	
*	AA91-10341E	ASSY-CABINET,FRONT;TXJ2554,PA100,VO,BLK	
	L3113-0003-011	BOSS-CABINET;HIPSVOBLKCT-5073	
	AA64-31137A	CABINET-FRONT;HIPS VO BLK PA100 CT-633	
	AA64-40473A	INDICATOR-LED;PMMA CLR CT-633	
	AA64-10732A	KNOB-CONTROL;ABS HB BLK CT-63	
	AA64-10733A	KNOB-POWER;ABS HB BLK CT-633	
	3001-000003	SPEAKER;3W,16ohm,88+-2dB,180+-36Hz	
	AA61-60003T	SPRING-CS;-,-,SUS304,0.5,OD7,	
	AA64-40472A	WINDOW-REMOTE;PCVIOLET CT-633	
		ASSY-PCB,A/V	
*	LA95-90026X	ASSY-PCB,A/V;CT-683B,KCT57A,NTSC,100	
	3722-001031	JACK-RCA;3P,3.6MM,#18,AU	

6-5 TXJ2566 (TXJ2567 and TXJ2566 Dissimilar Parts)

Loc. No.	Code No.	Description ; Specification	Remark
		REMOCON	
	AA59-10112J	REMOCON;DP,-,TM58,AA59-10109H,-,-,-,-,	
		ASSY-PCB,MAIN(COM)	
	AA97-10062B	ASSY-PCB,MAIN(COM);TXJ2566/XAA,K51A,U.S	
	3722-001103	JACKRCA;5P	
		ASSY-ACCESSORY	
	AA68-00057B	MANUAL-USERS;K51A,ENG,µfiÇ¥Áõ2~1µµ,B5,W/P	
	AA68-11371A	MANUAL-USERS;K51A,FRE,TM58,B5,W/P 100(G)	

Loc. No.	Code No.	Description ; Specification	Remark
		ASSY-CABINET,FRONT	
	AA92-30241B	ASSY-CABINET,FRONT;CT25B7,VO,K51A.CCX	
		ASSY-CABINET	
	AA92-10232C	ASSY-CABINET(COM);CT25B7,VO,K51A.CCX	

6-6 TXJ2567/CCX (TXJ2567 and TXJ2567/CCX Dissimilar Parts)

Loc. No.	Code No.	Description ; Specification	Remark
		REMOCON	
	AA59-10112J	REMOCON;DP,-,TM58,AA59-10109H,-,-,-,-,	SECA
		ASSY-ACCESSORY	
	AA68-00057B	MANUAL-USERS;K51A,ENG,µfiÇ¥Áõ2~1µµ,B5,W/P	SECA
	AA68-11371A	MANUAL-USERS;K51A,FRE,TM58,B5,W/P 100(G)	SECA
		ASSY-CABINET	
	AA92-30241B	ASSY-CABINET,FRONT;CT25B7,VO,K51A.CCX	SECA

Loc. No.	Code No.	Description ; Specification	Remark

Downloaded from www.Manualslib.com manuals search engine

6-7 TXJ2567

Loc. No.	Code No.	Description ; Specification	Remark
		REMOCON	
RMT	AA59-10112D	REMOCON;DP,TM58,-,-,-,-,-,AA59-10109D,	
		ASSY-PCB,MAIN	
A/MAIN	AA97-10062C	ASSY-PCB,MAIN(COM);TXJ2567/XAA,K51A,U.S	
C101	2401-000962	C-AL;22uF,20%,50V,GP,TP,5x11,5	
C102	2401-001363	C-AL;470UF,20%,16V,GP,TP,10X12	
C104	2202-000127	C-CERAMIC,MLC-AXIAL;10NF,+80-2	
C105	2401-001333	C-ELECTROLYTIC;CE04WTAPG50V0.4	
C106	2202-000127	C-CERAMIC,MLC-AXIAL;10NF,+80-2	
C107	2401-001333	C-ELECTROLYTIC;CE04WTAPG50V0.4	
C108	2401-000480	C-AL;10UF,20%,50V,GP,5X11MM,5M	
C110	2401-001840	C-AL;100UF,20%,16V,GP,TP,6.3X1	
C111	2202-000286	C-CERAMIC,MLC-AXIAL;56PF,5%,50	
C112	2202-000127	C-CERAMIC,MLC-AXIAL;10NF,+80-2	
C113	2202-000127	C-CERAMIC,MLC-AXIAL;10NF,+80-2	
C116	2202-000127	C-CERAMIC,MLC-AXIAL;10NF,+80-2	
C117	2202-000127	C-CERAMIC,MLC-AXIAL;10NF,+80-2	
C202	2305-000665	C-FILM;CF922N63VT104-J-40/1053	
C203	2305-000665	C-FILM;CF922N63VT104-J-40/1053	
C204	2401-000660	C-ELECTROLYTIC;CE04WTAPG50V2.2	
C205	2301-000016	C-FILMPEF;22NF,5%,100V,TP,7.2X	
C206	2202-002037	C-CERAMIC,MLC-AXIAL;100NF,+80-20	
C209	2202-002037	C-CERAMIC,MLC-AXIAL;100NF,+80-20	
C210	2401-001840	C-AL;100UF,20%,16V,GP,TP,6.3X1	
C211	2305-000665	C-FILM;CF922N63VT104-J-40/1053	
C212	2202-002037	C-CERAMIC,MLC-AXIAL;100NF,+80-20	
C213	2305-000665	C-FILM;CF922N63VT104-J-40/1053	
C217	2202-000819	C-CERAMIC,MLC-AXIAL;47NF,+80-2	
C223	2201-000258	C-CERAMIC,DISC;17PF,5%,50V,NPO,-,5MM,TP	
C224	2301-000445	C-FILM,PEF;4.7nF,5%,50V,TP,5.5x7x3mm,5mm	
C225	2305-000665	C-FILM;CF922N63VT104-J-40/1053	
C226	2401-001840	C-AL;100UF,20%,16V,GP,TP,6.3X1	
C227	2305-000665	C-FILM;CF922N63VT104-J-40/1053	
C228	2401-000660	C-ELECTROLYTIC;CE04WTAPG50V2.2	
C229	2301-000342	C-FILM,PEF;2.2nF,5%,50V,TP,7.4x3.9x13mm,	
C230	2202-000162	C-CERAMIC,MLC-AXIAL;15PF,5%,50	
C232	2301-000445	C-FILM,PEF;4.7nF,5%,50V,TP,5.5x7x3mm,5mm	
C233	2401-000603	C-AL;1UF,20%,50V,GP,5X11MM,5MM	
C234	2309-000138	C-FILM,PE-PPF;100NF,5%,50V,TP,	
C235	2202-000286	C-CERAMIC,MLC-AXIAL;56PF,5%,50	
C237	2305-000665	C-FILM;CF922N63VT104-J-40/1053	
C239	2401-002229	C-AL;470NF,20%,50V,WT,TP,5X11,	
C240	2201-000379	C-CERAMIC,DISC;22NF,+80-20%,50	
C242	2401-000480	C-AL;10UF,20%,50V,GP,5X11MM,5M	
C243	2201-000483	C-CERAMIC,DISC;33PF,5%,50V,NPO	
C244	2401-000660	C-ELECTROLYTIC;CE04WTAPG50V2.2	
C250	2301-000383	C-FILM,PEF;10nF,5%,50V,TP,6x7x3.2mm,5mm	
C302	2401-000360	C-AL;100UF,20%,50V,GP,8X11MM,5	
C303	2305-000149	C-FILM;CF922N100VT104-J-40/105	
C304	2305-000285	C-FILM,MPEF;220NF,5%,100V,-,5M	
C305	2201-000259	C-CERAMIC,DISC;180PF,10%,500V,Y5P,6X4MM,	
C306	2401-000360	C-AL;100UF,20%,50V,GP,8X11MM,5	
C308	2301-000254	C-FILM,PEF;39NF,5%,50V,7.5X3.5X6.5MM,5MM	
C401	2201-000599	C-CERAMIC,DISC;560PF,10%,500V,	
⚠ C402	2301-001219	C-FILM,MPE-PPF;3.9nF,5%,1.6KV,TP,29x8.5x	
C404	2306-000204	C-FILM,MPPF;430NF,5%,400V,-,20	
C405	2301-000213	C-FILM,PEF;220NF,5%,250V,21.5X	
C406	2201-000556	C-CERAMIC,DISC;470PF,10%,500V,	
C407	2401-001397	C-AL;470UF,20%,25V,GP,10X16MM,	
C408	2201-000556	C-CERAMIC,DISC;470PF,10%,500V,	
C409	2401-001397	C-AL;470UF,20%,25V,GP,10X16MM,	
C410	2401-002268	C-ELEC;CE04-40/105250VT2R2-MWR	
C411	2201-000556	C-CERAMIC,DISC;470PF,10%,500V,	
C412	2401-000927	C-AL;22UF,20%,250V,GP,13X20MM,	
C413	2401-000302	C-AL;100UF,20%,25V,GP,6X11MM,5	
C414	2201-000984	C-CERAMIC,DISC;680PF,10%,2KV,Y	
C415	2303-000331	C-FILM;4.7NF,5%,630V,19.5X12X7	
C417	2301-000383	C-FILM,PEF;10nF,5%,50V,TP,6x7x3.2mm,5mm	
⚠ C419	2306-000254	C-FILM,MPPF;7.4NF,3%,1.6KV,-,2	
C501	2305-000704	C-M,POLYESTER;CFS922MTAPG250V1	
C503	2401-001232	C-AL;4.7UF,20%,250V,GP,10X12.5	
C504	2202-000121	C-CERAMIC,MLC-AXIAL;100PF,10%,	
C505	2202-000121	C-CERAMIC,MLC-AXIAL;100PF,10%,	
C506	2202-000121	C-CERAMIC,MLC-AXIAL;100PF,10%,	
C510	2401-002264	C-AL;10UF,20%,350V,GP,TP,10X20	
C518	2201-002063	C-CERAMIC,DISC;10nF,+80-20%,3KV,Y5V,TP,1	
C520	2202-000862	C-CERAMIC;CCOASL50VT391-JUP050	
C610	2301-000192	C-FILM,PEF;1NF,5%,50V,5.3X10MM	
C627	2401-000603	C-AL;1UF,20%,50V,GP,5X11MM,5MM	
C628	2401-000471	C-AL;10UF,20%,50V,BP,6X11MM,5M	
C629	2401-000027	C-AL;4.7UF,20%,50V,GP,5*11MM,5MEA	
C631	2401-000603	C-AL;1UF,20%,50V,GP,5X11MM,5MM	
C632	2401-000471	C-AL;10UF,20%,50V,BP,6X11MM,5M	
C634	2401-001998	C-AL;1000UF,20%,25V,GP,TP,10X20	
C650	2202-000796	C-CERAMIC,MLC-AXIAL;1NF,10%,50	
C651	2202-000796	C-CERAMIC,MLC-AXIAL;1NF,10%,50	
C701	2401-000480	C-AL;10UF,20%,50V,GP,5X11MM,5M	
C702	2401-000302	C-AL;100UF,20%,25V,GP,6X11MM,5	
C703	2401-000603	C-AL;1UF,20%,50V,GP,5X11MM,5MM	
C704	2401-000603	C-AL;1UF,20%,50V,GP,5X11MM,5MM	
C706	2401-000027	C-AL;4.7UF,20%,50V,GP,5*11MM,5MEA	
C707	2401-000480	C-AL;10UF,20%,50V,GP,5X11MM,5M	
C708	2401-000480	C-AL;10UF,20%,50V,GP,5X11MM,5M	
C709	2401-000027	C-AL;4.7UF,20%,50V,GP,5*11MM,5MEA	
C712	2305-000708	C-FILM;CF922N100VT154-J-40/105	
C713	2305-000355	C-FILM,MPEF;330NF,5%,63V,-,5MM	
C714	2305-000355	C-FILM,MPEF;330NF,5%,63V,-,5MM	
C715	2305-000708	C-FILM;CF922N100VT154-J-40/105	
C716	2301-000289	C-FILM,PEF;5.6NF,5%,50V,6.5X5.	
C717	2301-000289	C-FILM,PEF;5.6NF,5%,50V,6.5X5.	
⚠ C801	2401-001387	C-AL;470uF,20%,250V,GP,BK,25.4x40,1	
C802	2201-000332	C-CERAMIC,AC;CK45PTAPGE250V222	
C803	2201-000332	C-CERAMIC,AC;CK45PTAPGE250V222	
C804	2303-000163	C-FILM,PPF;2.2NF,5%,800V,-,-,T	
C805	2201-000991	C-CERAMIC,HIC;CK45(T)B2KV561-K	
C806	2401-003026	C-AL;330UF,20%,200V,GP,ST,22X3	
C807	2201-000599	C-CERAMIC,DISC;560PF,10%,500V,	
C808	2401-001571	C-ELECTROLYTIC;CE04WTAPG50V47-	
C809	2401-000302	C-AL;100UF,20%,25V,GP,6X11MM,5	
C810	2401-000611	C-AL;1UF,20%,50V,WT,5X11MM,5MM	
C811	2401-000302	C-AL;100UF,20%,25V,GP,6X11MM,5	
C812	2401-000302	C-AL;100UF,20%,25V,GP,6X11MM,5	
C813	2401-002144	C-AL;47uF,20%,16V,GP,TP,5x11,5	
C815	2401-000293	C-ELECTROLYTIC;CE04WTAPG200V10	
C816	2401-000164	C-ALUMINUM;1000UF,20%,25V,WT,TP,12.5X20	
C817	2202-002037	C-CERAMIC,MLC-AXIAL;100NF,+80-20	
C820	2401-001998	C-AL;1000UF,20%,25V,GP,TP,10X20	
⚠ C821	2201-000990	C-CERAMIC,AC;ECK-ZNS472MEX(RO)	
C822	2201-000963	C-CERAMIC;CK45Y5U400VACT102-MH	
⚠ C823	2201-000990	C-CERAMIC,AC;ECK-ZNS472MEX(RO)	
C825	2301-000310	C-FILM,PEF;68NF,5%,50V,8.0X8.5	
C827	2301-000224	C-FILM,PEF;22NF,5%,50V,7.4X3.9	
C834	2401-002288	C-ELEC;CE04-55/10525VT471-MWRG	
C855	2201-000599	C-CERAMIC,DISC;560PF,10%,500V,	
C861	2401-000287	C-AL;100UF,20%,16V,WT,6X11MM,5	
C862	2401-000480	C-AL;10UF,20%,50V,GP,5X11MM,5M	
C873	2401-000302	C-AL;100UF,20%,25V,GP,6X11MM,5	
C890	2201-000374	C-CERAMIC,DISC;220pF,5%,50V,CH,TP,12.5x3	
C891	2201-000292	C-CERAMIC,DISC;1NF,10%,50V,Y5P	
C901	2401-002144	C-AL;47uF,20%,16V,GP,TP,5x11,5	
C902	2202-000796	C-CERAMIC,MLC-AXIAL;1NF,10%,50	
C903	2401-002144	C-AL;47uF,20%,16V,GP,TP,5x11,5	
C904	2202-000796	C-CERAMIC,MLC-AXIAL;1NF,10%,50	
C905	2401-001333	C-ELECTROLYTIC;CE04WTAPG50V0.4	
C906	2202-000121	C-CERAMIC,MLC-AXIAL;100PF,10%,	
C907	2401-002144	C-AL;47uF,20%,16V,GP,TP,5x11,5	
C908	2201-000573	C-CERAMIC,DISC;47PF,5%,50V,NPO	
C909	2201-000193	C-CERAMIC,DISC;10PF,0.25PF,50V	
C910	2201-000119	C-CERAMIC,DISC;100NF,+80-20%,5	
C911	2401-000302	C-AL;100UF,20%,25V,GP,6X11MM,5	

Downloaded from www.Manualslib.com manuals search engine

Loc. No.	Code No.	Description ; Specification	Remark
C912	2301-000383	C-FILM,PEF;10nF,5%,50V,TP,6x7x3.2mm,5mm	
C913	2202-000127	C-CERAMIC,MLC-AXIAL;10NF,+80-2	
C914	2202-000286	C-CERAMIC,MLC-AXIAL;56PF,5%,50	
C920	2202-000263	C-CERAMIC,MLC-AXIAL;470PF,10%,50V,Y5P,3.	
CB01	2306-000318	C-FILM,MPPF;220NF,20%,250V,-,2	
CD10	2401-000603	C-AL;1UF,20%,50V,GP,5X11MM,5MM	
CD11	2401-001989	C-AL;4.7uF,20%,50V,BP,TP,5x11,5	
CD12	2401-000480	C-AL;10UF,20%,50V,GP,5X11MM,5M	
CD26	2401-001026	C-AL;3.3UF,20%,50V,GP,5X11MM,5	
CN501B	AA39-20604A	LEAD CONNECTOR-ASSY;-,YBNH250-09,YBNH05/	
CN601	3711-002643	POST-HEADER;YW025-04(AUTO)	
CN602	3711-002644	POST-HEADER;67094-005(AUTO)	
CN701	3711-002648	POST-HEADER;67094-009(AUTO)	
CORD/H	AA61-20284A	HOLDER P CORD;PP,VO,BLK,KE-002	
CORD/P	AA39-10007Y	POWER-CORD;-,EP2/YES,SPT-2 18AWGx2C,2.4m	
CP01	2301-000224	C-FILM,PEF;22NF,5%,50V,7.4X3.9	
CP02	2301-000224	C-FILM,PEF;22NF,5%,50V,7.4X3.9	
CP03	2305-000665	C-FILM;CF922N63VT104-J-40/1053	
CP04	2305-000665	C-FILM;CF922N63VT104-J-40/1053	
CP05	2401-001496	C-AL;47UF,20%,16V,GP,5X7MM,5MM	
CU02	2202-002037	C-CERAMIC,MLC-AXIAL;100NF,+80-20	
CU06	2401-000480	C-AL;10UF,20%,50V,GP,5X11MM,5M	
CU11	2202-002037	C-CERAMIC,MLC-AXIAL;100NF,+80-20	
CU12	2202-002037	C-CERAMIC,MLC-AXIAL;100NF,+80-20	
CU13	2202-002037	C-CERAMIC,MLC-AXIAL;100NF,+80-20	
CU33	2401-001989	C-AL;4.7uF,20%,50V,BP,TP,5x11,5	
CUD06	2401-001989	C-AL;4.7uF,20%,50V,BP,TP,5x11,5	
CUD08	2301-000289	C-FILM,PEF;5.6NF,5%,50V,6.5X5.	
CUD09	2301-000160	C-FILM,PEF;12NF,5%,50V,11.0X6.	
CUD15	2401-000027	C-AL;4.7UF,20%,50V,GP,5*11MM,5MEA	
CUD18	2401-001840	C-AL;100UF,20%,16V,GP,TP,6.3X1	
CUD20	2401-001989	C-AL;4.7uF,20%,50V,BP,TP,5x11,5	
CUD21	2401-000027	C-AL;4.7UF,20%,50V,GP,5*11MM,5MEA	
CUD23	2401-001989	C-AL;4.7uF,20%,50V,BP,TP,5x11,5	
CUD24	2301-000204	C-FILM,PEF;2.7NF,5%,50V,7.4X3.	
CUD25	2301-000356	C-FILM,PEF;47nF,5%,50V,TP,7.5x4.0x6.5,5m	
CUD28	2401-001989	C-AL;4.7uF,20%,50V,BP,TP,5x11,5	
CUD29	2401-000480	C-AL;10UF,20%,50V,GP,5X11MM,5M	
CUD30	2401-000603	C-AL;1UF,20%,50V,GP,5X11MM,5MM	
⚠CX01	2401-000480	C-AL;10UF,20%,50V,GP,5X11MM,5M	
D201	0401-000005	DIODE;1N4148TAPG	
D202	0402-000132	DIODE-RECTIFIER;1N4004,400V,1A,DO-41	
D204	0401-000005	DIODE;1N4148TAPG	
D205	0401-000005	DIODE;1N4148TAPG	
D206	0401-000005	DIODE;1N4148TAPG	
D207	0401-000005	DIODE;1N4148TAPG	
D208	0401-000005	DIODE;1N4148TAPG	
D210	0401-000005	DIODE;1N4148TAPG	
D301	0402-001105	DIODE-RECTIFIER;ERB43-04SV1,40	
D401	0402-000493	DIODE-RECTIFIER;1R5GU41,400V,1	
D402	0402-000132	DIODE-RECTIFIER;1N4004,400V,1A,DO-41	
D403	0402-000132	DIODE-RECTIFIER;1N4004,400V,1A,DO-41	
D404	0402-000540	DIODE-RECTIFIER;RU20A,600V,1.5	
D405	0402-001105	DIODE-RECTIFIER;ERB43-04SV1,40	
D503	0402-000132	DIODE-RECTIFIER;1N4004,400V,1A,DO-41	
D511	0402-001105	DIODE-RECTIFIER;ERB43-04SV1,40	
D512	0402-001105	DIODE-RECTIFIER;ERB43-04SV1,40	
D513	0402-001105	DIODE-RECTIFIER;ERB43-04SV1,40	
D601	0401-000005	DIODE;1N4148TAPG	
⚠D801	0402-001082	DIODEBRIDGE;RBV406LFB,600V,4A	
D803	0402-000493	DIODE-RECTIFIER;1R5GU41,400V,1	
D804	0402-001105	DIODE-RECTIFIER;ERB43-04SV1,40	
D810	0402-000493	DIODE-RECTIFIER;1R5GU41,400V,1	
D811	0402-000540	DIODE-RECTIFIER;RU20A,600V,1.5	
D814	0402-000213	DIODE-RECTIFIER;ERB12-06,600V,	
D825	0402-000493	DIODE-RECTIFIER;1R5GU41,400V,1	
D903	0401-000005	DIODE;1N4148TAPG	
D908	0401-000005	DIODE;1N4148TAPG	
D910	0401-000005	DIODE;1N4148TAPG	
⚠D951	0402-000132	DIODE-RECTIFIER;1N4004,400V,1A,DO-41	
D962	0401-000005	DIODE;1N4148TAPG	
DU01	0401-000005	DIODE;1N4148TAPG	
DU02	0401-000005	DIODE;1N4148TAPG	
DU03	0401-000005	DIODE;1N4148TAPG	
⚠DX01	0402-001105	DIODE-RECTIFIER;ERB43-04SV1,40	
DZ101	0403-000700	DIODE-ZENER;TZP33A,33V,31-35V,	
DZ210	0403-000563	DIODE-ZENER;MTZ9.1B,9.1V,8.57-	

Loc. No.	Code No.	Description ; Specification	Remark
DZ211	0403-000563	DIODE-ZENER;MTZ9.1B,9.1V,8.57-	
DZ217	0403-000563	DIODE-ZENER;MTZ9.1B,9.1V,8.57-	
DZ231	0403-000563	DIODE-ZENER;MTZ9.1B,9.1V,8.57-	
DZ250	0403-000662	DIODE-ZENER;MTZ3.0B,3.0V,3.01-	
DZ302	0403-000660	DIODE-ZENER;MTZ22A,22V,20.15-2	
DZ303	0403-000660	DIODE-ZENER;MTZ22A,22V,20.15-2	
DZ304	0403-000660	DIODE-ZENER;MTZ22A,22V,20.15-2	
DZ305	0403-000494	DIODE-ZENER;MTZ39B,39V,35.36/3	
DZ306	0403-000700	DIODE-ZENER;TZP33A,33V,31-35V,	
DZ401	0403-000300	DIODE-ZENER;MTZ8.2B,7.78-.19V,	
DZ402	0403-000355	DIODEZENER;UZ5.1BSB,4.97~5.17V,0.5UA,500	
DZ505	0403-000563	DIODE-ZENER;MTZ9.1B,9.1V,8.57-	
DZ601	0403-000563	DIODE-ZENER;MTZ9.1B,9.1V,8.57-	
DZ612	0403-000656	DIODE-ZENER;MTZ15C,15V,14.35-1	
DZ613	0403-000656	DIODE-ZENER;MTZ15C,15V,14.35-1	
DZ621	0403-000656	DIODE-ZENER;MTZ15C,15V,14.35-1	
DZ622	0403-000656	DIODE-ZENER;MTZ15C,15V,14.35-1	
DZ707	0403-000563	DIODE-ZENER;MTZ9.1B,9.1V,8.57-	
DZ708	0403-000563	DIODE-ZENER;MTZ9.1B,9.1V,8.57-	
⚠DZ801	1405-001036	VARISTOR;430V,2500A,14x8.5mm,TP	
DZ802	1405-001036	VARISTOR;430V,2500A,14x8.5mm,TP	
DZ803	0403-000300	DIODE-ZENER;MTZ8.2B,7.78-.19V,	
DZ804	0403-000296	DIODE-ZENER;EQA02-06A/MTZ5.6B(	
DZ805	0403-000296	DIODE-ZENER;EQA02-06A/MTZ5.6B(	
DZ806	0403-000562	DIODE ZENER;MTZ7.5B,7.5V,7.07-7-45V,500M	
DZ807	0403-000297	DIODE-ZENER;EQA02-06D/MTZ6.2B(	
DZ808	0403-000296	DIODE-ZENER;EQA02-06A/MTZ5.6B(	
DZ810	0401-000005	DIODE;1N4148TAPG	
DZ864	0403-000296	DIODE-ZENER;EQA02-06A/MTZ5.6B(	
DZ901	0403-000355	DIODEZENER;UZ5.1BSB,4.97~5.17V,0.5UA,500	
DZ902	0403-000562	DIODE ZENER;MTZ7.5B,7.5V,7.07-7-45V,500M	
DZ905	0403-000297	DIODE-ZENER;EQA02-06D/MTZ6.2B(	
DZ906	0403-000297	DIODE-ZENER;EQA02-06D/MTZ6.2B(	
DZ907	0403-000297	DIODE-ZENER;EQA02-06D/MTZ6.2B(	
DZ908	0403-000297	DIODE-ZENER;EQA02-06D/MTZ6.2B(	
DZ910	0403-000297	DIODE-ZENER;EQA02-06D/MTZ6.2B(	
⚠DZX01	0403-000667	DIODE-ZENER;MTZ6.8A,6.8V,6.29-	
⚠F801	3601-001012	FUSE-FERRULE;250V,4A,SLOW-BLOW	
F801A	3602-000114	FUSE-HOLDER;-,-,30MOHM	
F801B	3602-000114	FUSE-HOLDER;-,-,30MOHM	
GT102	AA39-20010B	LEAD-CONNECTOR,ASSY;-,YFH800-01,500MM,1P	
IC201	1204-001174	ICHOR/VERPROCESS;TDA8373A,DIP,	
IC202	1204-000506	IC-LINEAR;LA7510SIP9P	
IC301	1204-000517	IC-LINEAR;LA7845SIPVERTICALAMP	H/SINK
IC501	1201-001330	IC-VIDEO;TDA6108JF,ZSIP,9,SINGLE,-	H/SINK
IC603	1201-001308	IC-POWERAMP;7266,ZIP,15P,-,DUAL,26dB,PL	H/SINK
IC701	1204-001455	IC-VOLUME/TONECONT.;TDA7449,DIP,20P,300	
IC801	1203-001482	IC-PWMCONTROLLER;3S1265R,TO-3P,5P,210,P	H/SINK
IC802	1203-000644	IC-POSI.FIXEDREG.;7630,SIP,10P	H/SINK
⚠IC851	0604-001038	PHOTOCOUPLER;TR,130-260%,200MW	
IC852	1203-001217	IC-POST,ADJUSTREG;431,T0-92,3P,4.58MIL,P	
IC853	1203-001225	IC-POSI.FIXEDREG.;78R09,TO-220,4P,-,PLA	
IC901	AA13-00017A	IC-MCU;-,Z9036512PSC-R4127	
IC902	1103-001106	IC-EEPROM;24C080,1028x8BIT,DIP,8P,300MIL	
ICD01	1209-001116	IC-ETC,LINEAR;CXA2104S,DIP,30P,-,PLASTI	
ICP01	1209-000214	IC-DELAYLINE;TDA4665,DIP,16P,300MIL,PLA	
J258	2001-000780	R-CARBON;470ohm,5%,1/8W,AA,TP,1.8x3.2mm	
JA701	3722-001261	JACK-RCA;5P(5P+1P),3.2MM,NI,BLK	
L102	2701-000142	INDUCTOR-AXIAL;1UH,10%,2.5X3.4	
L103	2701-000207	INDUCTOR-AXIAL;56UH,5%,2.5X3.4	
L104	2701-000114	INDUCTOR-AXIAL;10UH,10%,2.5X3.	
L201	2701-000127	INDUCTOR-AXIAL;15UH,10%,2.5X3.	
L202	3301-000287	CORE-FERRITEBEAD;AA,3.5X1.0X6.	
L203	3301-000287	CORE-FERRITEBEAD;AA,3.5X1.0X6.	
L204	2701-000114	INDUCTOR-AXIAL;10UH,10%,2.5X3.	
L205	2701-000114	INDUCTOR-AXIAL;10UH,10%,2.5X3.	
L206	2701-000114	INDUCTOR-AXIAL;10UH,10%,2.5X3.	
L237	2701-000114	INDUCTOR-AXIAL;10UH,10%,2.5X3.	
L401B	AA27-30003G	COIL-LINEARITY;-,44UH,DR14X15,	
L404	3301-000287	CORE-FERRITEBEAD;AA,3.5X1.0X6.	
L405	2701-000142	INDUCTOR-AXIAL;1UH,10%,2.5X3.4	
L406	2901-000297	FILTER-EMI ON BOARD;-,3A,-,-,3.5x5,TP,-	
L602	3301-000287	CORE-FERRITEBEAD;AA,3.5X1.0X6.	
L710	2701-000114	INDUCTOR-AXIAL;10UH,10%,2.5X3.	
L802	AA29-30002F	FILTER-LINENOISE;-,6MH,2.45A,-	
L807	3301-000287	CORE-FERRITEBEAD;AA,3.5X1.0X6.	
L808	3301-001223	CORE-FERRITE BEAD;AB,-,3.5X5X0.8MM,-,TP,	

Downloaded from www.Manualslib.com manuals search engine

Loc. No.	Code No.	Description ; Specification	Remark
L809	3301-001223	CORE-FERRITE BEAD;AB,-,3.5X5X0.8MM,-,TP,	
L810	AA27-10002Y	COIL-CHOKE;-,100UH,K,10,700MA,	
L811	2901-000297	FILTER-EMI ON BOARD;-,3A,-,-,3.5x5,TP,-	
L812	2901-000297	FILTER-EMI ON BOARD;-,3A,-,-,3.5x5,TP,-	
L814	2901-000297	FILTER-EMI ON BOARD;-,3A,-,-,3.5x5,TP,-	
L815	3301-000287	CORE-FERRITEBEAD;AA,3.5X1.0X6.	
L816	AA27-10002Y	COIL-CHOKE;-,100UH,K,10,700MA,	
L864	3301-000287	CORE-FERRITEBEAD;AA,3.5X1.0X6.	
L901	2701-000114	INDUCTOR-AXIAL;10UH,10%,2.5X3.	
L902	2701-000114	INDUCTOR-AXIAL;10UH,10%,2.5X3.	
L903	3301-000287	CORE-FERRITEBEAD;AA,3.5X1.0X6.	
LD901	AA96-30001B	ASSY-LED,GUIDE;-,AA61-50055A,D	
LK803	AA29-30002F	FILTER-LINENOISE;-,6MH,2.45A,-	
LUD01	2701-000106	INDUCTOR-AXIAL;1.5uH,10%,2.8x7mm	
NT801	1404-001045	THERMISTOR NTC;4.7OHM,15%,2900K,35.0MW,T	
PUD01	1404-000208	POSISTOR;PTH631D02BF7ROM140TDE	
Q101	0501-000436	TR-SMALLSIGNAL;KTC3197,NPN,30V	
Q201	0501-000389	TRANSISTOR;KSC815-Y(TAPG)/YTAM	
Q204	0501-000283	TRANSISTOR;KSA539-Y(TAPG)/YTAM	
⚠ Q401	0502-000209	TR-POWER;2SD1880,NPN,1500V,800	H/SINK
Q403	0502-001007	TR-POWER;KSC2073-H2,NPN,150V,1	
Q601	0501-000389	TRANSISTOR;KSC815-Y(TAPG)/YTAM	
Q604	0501-000389	TRANSISTOR;KSC815-Y(TAPG)/YTAM	
Q901	0504-000123	TR-DIGITAL;KSR1010,NPN,300MW,1	
Q902	0501-000389	TRANSISTOR;KSC815-Y(TAPG)/YTAM	
Q951	0501-000369	TRANSISTOR;KSC2331-Y(TAPG)	
QP01	0501-000389	TRANSISTOR;KSC815-Y(TAPG)/YTAM	
QP02	0501-000389	TRANSISTOR;KSC815-Y(TAPG)/YTAM	
QU03	0504-000123	TR-DIGITAL;KSR1010,NPN,300MW,1	
QU05	0501-000283	TRANSISTOR;KSA539-Y(TAPG)/YTAM	
⚠ QX01	0501-000283	TRANSISTOR;KSA539-Y(TAPG)/YTAM	
R102	2001-000591	R-CARBON;3.3KOHM,5%,1/8W,AA,TP	
R103	2001-000660	R-CARBON;33KOHM,5%,1/8W,AA,TP,	
R104	2001-000221	R-CARBON;1.2KOHM,5%,1/8W,AA,TP	
R107	2001-000281	R-CARBON;100OHM,5%,1/8W,AA,TP,	
R108	2001-000281	R-CARBON;100OHM,5%,1/8W,AA,TP,	
R109	2001-000938	R-METAL;68ohm,5%,1/8W,AA,TP,1.8x3.2mm	
R111	2001-000793	R-CARBON;47OHM,5%,1/8W,AA,TP,1	
R112	2001-000281	R-CARBON;100OHM,5%,1/8W,AA,TP,	
R113	2001-000577	R-CARBON;2KOHM,5%,1/8W,AA,TP,1	
R114	2001-000221	R-CARBON;1.2KOHM,5%,1/8W,AA,TP	
R120	2001-000490	R-CARBON;200OHM,5%,1/8W,AA,TP,	
R200	2001-000577	R-CARBON;2KOHM,5%,1/8W,AA,TP,1	
R202	2001-000005	R-CARBON;390OHM,5%,1/8W,AA,TP,	
R204	2001-000793	R-CARBON;47OHM,5%,1/8W,AA,TP,1	
R205	2001-000325	R-CARBON;120OHM,5%,1/8W,AA,TP,	
R206	2001-000281	R-CARBON;100OHM,5%,1/8W,AA,TP,	
R207	2001-000325	R-CARBON;120OHM,5%,1/8W,AA,TP,	
R209	2001-000281	R-CARBON;100OHM,5%,1/8W,AA,TP,	
R210	2001-000281	R-CARBON;100OHM,5%,1/8W,AA,TP,	
R211	2001-000864	R-CARBON;56Kohm,5%,1/8W,AA,TP,1.8x3.2mm	
R212	2001-000617	R-CARBON;3.9MOHM,5%,1/8W,AA,TP,1.8X3.2M	
R213	2001-000429	R-CARBON;1Kohm,5%,1/8W,AA,TP,1.8x3.2mm	
R214	2001-000281	R-CARBON;100OHM,5%,1/8W,AA,TP,	
R215	2001-000281	R-CARBON;100OHM,5%,1/8W,AA,TP,	
R216	2001-000281	R-CARBON;100OHM,5%,1/8W,AA,TP,	
R217	2001-000011	R-CARBON;75Kohm,5%,1/8W,AA,TP,1.8x3.2mm	
R219	2001-000864	R-CARBON;56Kohm,5%,1/8W,AA,TP,1.8x3.2mm	
R222	2001-000780	R-CARBON;470ohm,5%,1/8W,AA,TP,1.8x3.2mm	
R223	2001-000252	R-CARBON;1.6KOHM,5%,1/8W,AA,TP	
R224	2001-000734	R-CARBON;4.7KOHM,5%,1/8W,AA,TP	
R226	2001-000273	R-CARBON;100KOHM,5%,1/8W,AA,TP	
R228	2004-001089	R-METAL;560KOHM,5%,1/8W,AA,TP,	
R229	2001-000938	R-METAL;68ohm,5%,1/8W,AA,TP,1.8x3.2mm	
R230	2001-000591	R-CARBON;3.3KOHM,5%,1/8W,AA,TP	
R231	2001-000281	R-CARBON;100OHM,5%,1/8W,AA,TP,	
R232	2001-000440	R-CARBON;1OHM,5%,1/8W,AA,TP,1.	
R233	2001-000539	R-CARBON;24KOHM,5%,1/8W,AA,TP,	
R234	2001-000008	R-CARBON;15KOHM,5%,1/8W,AA,TP,	
R235	2001-000522	R-CARBON;22KOHM,5%,1/8W,AA,TP,	
R237	2004-001914	R-METAL;39KOHM,2%,1/8W,AA,TP,1	
R239	2001-000864	R-CARBON;56Kohm,5%,1/8W,AA,TP,1.8x3.2mm	
R245	2001-000273	R-CARBON;100KOHM,5%,1/8W,AA,TP	
R250	2001-000066	R-CARBON(S);10KOHM,5%,1/2W,AA,	
R251	2001-000531	R-CARBON;240KOHM,5%,1/8W,AA,TP,1.8X3.2M	
R252	2001-001062	R-CARBON(S);10MOHM,5%,1/2W,AA,	
R253	2001-001411	R-CARBON;5.6Mohm,5%,1/8W,AA,TP,1.7x3.2m	

Loc. No.	Code No.	Description ; Specification	Remark
R260	2001-000832	R-CARBON;510OHM,5%,1/8W,AA,TP,	
R301	2001-001045	R-CARBON(S);1.2KOHM,5%,1/2W,AB	
R302	2001-001045	R-CARBON(S);1.2KOHM,5%,1/2W,AB	
R303	2001-000016	R-CARBON(S);1OHM,5%,1/2W,AA,TP	
R304	2003-002014	R-METALOXIDE(S);0.6OHM,5%,2W,A	
R306	2003-002069	R-METALOXIDE;470OHM,5%,2W,AF,T	
R309	2003-002069	R-METALOXIDE;470OHM,5%,2W,AF,T	
R311	2003-002069	R-METALOXIDE;470OHM,5%,2W,AF,T	
R403	2001-001114	R-CARBON(S);270OHM,5%,1/2W,AA,	
R404	2001-000019	R-CARBON(S);10ohm,5%,1/2W,AA,TP,2.4x6.4m	
R405	2003-000540	R-METALOXIDE(S);1KOHM,5%,2W,AD	
R406	2003-002008	R-METAL OXIDE(S);18KOHM,5%,2W,AF,TP,3.9X	
R407	2001-001153	R-CARBON(S);47OHM,5%,1/2W,AA,T	
R408	2004-001390	R-METAL(S);1KOHM,2%,1/2W,AA,TP	
⚠ R409	2008-001011	R-FUSIBLE(S);0.18OHM,10%,2W,AF	
⚠ R410	2008-001011	R-FUSIBLE(S);0.18OHM,10%,2W,AF	
R411	2004-001408	R-METAL(S);91KOHM,1%,1/2W,AA,T	
⚠ R412	2004-001408	R-METAL(S);91KOHM,1%,1/2W,AA,T	
R415	2003-002007	R-METAL OXIDE(S);4.7KOHM,5%,2W,AF,TP,3.9	
R416	2001-000613	R-CARBON;3.9KOHM,5%,1/8W,AA,TP	
⚠ R418	2008-000254	R-FUSIBLE(S);0.68OHM,5%,2W,AF,	
R419	2008-000252	R-FUSIBLE(S);0.47OHM,10%,1/2W,	
R501	2001-000490	R-CARBON;200OHM,5%,1/8W,AA,TP,	
R502	2001-000490	R-CARBON;200OHM,5%,1/8W,AA,TP,	
R503	2001-000490	R-CARBON;200OHM,5%,1/8W,AA,TP,	
R504	2001-000429	R-CARBON;1Kohm,5%,1/8W,AA,TP,1.8x3.2mm	
R505	2001-000429	R-CARBON;1Kohm,5%,1/8W,AA,TP,1.8x3.2mm	
R506	2001-000429	R-CARBON;1Kohm,5%,1/8W,AA,TP,1.8x3.2mm	
R517	2002-001009	R-COMPOSITION;2.7KOHM,10%,1/2W,AA,TP,3.7	
R518	2002-001009	R-COMPOSITION;2.7KOHM,10%,1/2W,AA,TP,3.7	
R519	2002-001009	R-COMPOSITION;2.7KOHM,10%,1/2W,AA,TP,3.7	
R520	2001-000096	R-CARBON(S);1MOHM,5%,1/2W,AA,T	
R523	2008-000299	R-FUSIBLE;RF2RT470-J	
R524	2002-001006	R-COMPOSITION;RC1/2T4.7KK/ERC-	
R525	2008-000290	R-FUSIBLE;2.4OHM,5%,2W,AF,TP,3	
R526	2008-000254	R-FUSIBLE(S);0.68OHM,5%,2W,AF,	
R601	2001-000429	R-CARBON;1Kohm,5%,1/8W,AA,TP,1.8x3.2mm	
R602	2001-000290	R-CARBON;10KOHM,5%,1/8W,AA,TP,	
R603	2004-000195	R-METAL;100Kohm,1%,1/8W,AA,TP,1.8x3.2m	
R606	2001-000281	R-CARBON;100OHM,5%,1/8W,AA,TP,	
R607	2001-000429	R-CARBON;1Kohm,5%,1/8W,AA,TP,1.8x3.2mm	
R608	2001-000281	R-CARBON;100OHM,5%,1/8W,AA,TP,	
R610	2001-000429	R-CARBON;1Kohm,5%,1/8W,AA,TP,1.8x3.2mm	
R617	2001-000429	R-CARBON;1Kohm,5%,1/8W,AA,TP,1.8x3.2mm	
R618	2001-000290	R-CARBON;10KOHM,5%,1/8W,AA,TP,	
R619	2001-000281	R-CARBON;100OHM,5%,1/8W,AA,TP,	
R622	2001-000429	R-CARBON;1Kohm,5%,1/8W,AA,TP,1.8x3.2mm	
R623	2001-000290	R-CARBON;10KOHM,5%,1/8W,AA,TP,	
R624	2001-000281	R-CARBON;100OHM,5%,1/8W,AA,TP,	
R707	2001-000429	R-CARBON;1Kohm,5%,1/8W,AA,TP,1.8x3.2mm	
R708	2001-000085	R-CARBON(S);100KOHM,5%,1/2W,AA	
R709	2001-000429	R-CARBON;1Kohm,5%,1/8W,AA,TP,1.8x3.2mm	
R713	2001-000577	R-CARBON;2KOHM,5%,1/8W,AA,TP,1	
R714	2001-000577	R-CARBON;2KOHM,5%,1/8W,AA,TP,1	
R715	2001-001187	R-CARBON(S);75OHM,5%,1/2W,AA,T	
R719	2001-000281	R-CARBON;100OHM,5%,1/8W,AA,TP,	
R720	2001-000281	R-CARBON;100OHM,5%,1/8W,AA,TP,	
R802	2001-001150	R-CARBON(S);470KOHM,5%,1/2W,AA	
R803	2003-000994	R-METALOXIDE(S);33KOHM,5%,2W,AF,TP,3.9X1	
R804	2003-000994	R-METALOXIDE(S);33KOHM,5%,2W,AF,TP,3.9X1	
⚠ R805	2002-001013	R-COMPOSITION;4.7MOHM,10%,1/2W,AA,TP,3.7	
R806	2001-001071	R-CARBON(S);12KOHM,5%,1/2W,AA,	
R807	2001-001071	R-CARBON(S);12KOHM,5%,1/2W,AA,	
R808	2004-001889	R-METAL(S);127KOHM,1%,1/2W,AA,TP,2.5X6.5	
R810	2001-001150	R-CARBON(S);470KOHM,5%,1/2W,AA	
R811	2001-001153	R-CARBON(S);47OHM,5%,1/2W,AA,T	
R814	2001-001050	R-CARBON(S);1.5KOHM,5%,1/2W,AA	
R819	2001-001178	R-CARBON(S);680OHM,5%,1/2W,AA,	
R820	2003-001047	R-METAL OXIDE(S);68OHM,5%,2W,AF,TP,3.9X1	
R822	2001-000273	R-CARBON;100KOHM,5%,1/8W,AA,TP	
R826	2001-001125	R-CARBON(S);300KOHM,5%,1/2W,AA	
R827	2001-001093	R-CARBON(S);2.2KOHM,5%,1/2W,AA	
R828	2004-001983	R-METAL;2.49KOHM,1%,1/2W,AA,TP,2.4X6.4	
R830	2008-001011	R-FUSIBLE(S);0.18OHM,10%,2W,AF	
R831	2008-001011	R-FUSIBLE(S);0.18OHM,10%,2W,AF	
R832	2003-000458	R-METALOXIDE(S);100OHM,5%,2W,A	
R833	2003-001035	R-METALOXIDE(S);27OHM,5%,2W,AF	

Downloaded from www.Manualslib.com manuals search engine

Loc. No.	Code No.	Description ; Specification	Remark
R836	2008-000266	R-FUSIBLE(S);1OHM,5%,2W,AF,TP,	
R861	2008-001033	R-FUSIBLE(S);10OHM,5%,2W,AF,TP	
R862	2008-001033	R-FUSIBLE(S);10OHM,5%,2W,AF,TP	
R901	2001-000793	R-CARBON;47OHM,5%,1/8W,AA,TP,1	
R902	2001-000429	R-CARBON;1Kohm,5%,1/8W,AA,TP,1.8x3.2mm	
R903	2001-000281	R-CARBON;100OHM,5%,1/8W,AA,TP,	
R904	2001-000281	R-CARBON;100OHM,5%,1/8W,AA,TP,	
R905	2001-000290	R-CARBON;10KOHM,5%,1/8W,AA,TP,	
R906	2001-000472	R-CARBON;2.7KOHM,5%,1/8W,AA,TP	
R907	2001-000995	R-CARBON;820OHM,5%,1/8W,AA,TP,	
R908	2001-000232	R-CARBON;1.3KOHM,5%,1/8W,AA,TP	
R909	2001-000449	R-CARBON;2.2KOHM,5%,1/8W,AA,TP	
R911	2001-000290	R-CARBON;10KOHM,5%,1/8W,AA,TP,	
R912	2001-000832	R-CARBON;510OHM,5%,1/8W,AA,TP,	
R914	2001-000490	R-CARBON;200OHM,5%,1/8W,AA,TP,	
R915	2001-000241	R-CARBON;1.5KOHM,5%,1/8W,AA,TP	
R918	2001-000429	R-CARBON;1Kohm,5%,1/8W,AA,TP,1.8x3.2mm	
R920	2001-000734	R-CARBON;4.7KOHM,5%,1/8W,AA,TP	
R921	2001-001062	R-CARBON(S);10MOHM,5%,1/2W,AA,	
R922	2701-000114	INDUCTOR-AXIAL;10UH,10%,2.5X3.	
R923	2701-000114	INDUCTOR-AXIAL;10UH,10%,2.5X3.	
R924	2001-000449	R-CARBON;2.2KOHM,5%,1/8W,AA,TP	
R925	2001-000449	R-CARBON;2.2KOHM,5%,1/8W,AA,TP	
R926	2001-000449	R-CARBON;2.2KOHM,5%,1/8W,AA,TP	
R927	2001-000290	R-CARBON;10KOHM,5%,1/8W,AA,TP,	
R928	2004-001234	R-METAL;75KOHM,5%,1/8W,AA,TP,1	
R930	2001-000832	R-CARBON;510OHM,5%,1/8W,AA,TP,	
R931	2001-000397	R-CARBON;180KOHM,5%,1/8W,AA,TP	
R932	2001-001062	R-CARBON(S);10MOHM,5%,1/2W,AA,	
R935	2001-000832	R-CARBON;510OHM,5%,1/8W,AA,TP,	
R951	2001-000290	R-CARBON;10KOHM,5%,1/8W,AA,TP,	
R952	2001-000472	R-CARBON;2.7KOHM,5%,1/8W,AA,TP	
R953	2001-000947	R-CARBON;7.5KOHM,5%,1/8W,AA,TP	
R956	2001-000290	R-CARBON;10KOHM,5%,1/8W,AA,TP,	
R957	2001-000117	R-CARBON(S);68ohm,5%,1/2W,AA,TP,2.4x6.4m	
R958	2001-000241	R-CARBON;1.5KOHM,5%,1/8W,AA,TP	
R959	2001-000734	R-CARBON;4.7KOHM,5%,1/8W,AA,TP	
R961	2001-000766	R-CARBON;43KOHM,5%,1/8W,AA,TP,	
R962	2001-000290	R-CARBON;10KOHM,5%,1/8W,AA,TP,	
R964	2004-001390	R-METAL(S);1KOHM,2%,1/2W,AA,TP	
R965	2001-000273	R-CARBON;100KOHM,5%,1/8W,AA,TP	
R966	2001-000290	R-CARBON;10KOHM,5%,1/8W,AA,TP,	
R967	2001-000429	R-CARBON;1Kohm,5%,1/8W,AA,TP,1.8x3.2mm	
RA03	2003-002102	R-METAL OXIDE;68Kohm,5%,2W,AF,TP,4x12mm	
RA04	2003-002102	R-METAL OXIDE;68Kohm,5%,2W,AF,TP,4x12mm	
RL801	3501-001040	RELAYPOWER;12VDC,500MW,10A,1FO	
RM901	AA59-60001U	MODULE-REMOCON;-,ORC-50VF,38KH	
RN01	2001-000995	R-CARBON;820OHM,5%,1/8W,AA,TP,	
RP01	2001-000429	R-CARBON;1Kohm,5%,1/8W,AA,TP,1.8x3.2mm	
RP02	2001-000429	R-CARBON;1Kohm,5%,1/8W,AA,TP,1.8x3.2mm	
RP03	2001-000429	R-CARBON;1Kohm,5%,1/8W,AA,TP,1.8x3.2mm	
RP04	2001-000429	R-CARBON;1Kohm,5%,1/8W,AA,TP,1.8x3.2mm	
RS02	2001-001187	R-CARBON(S);75OHM,5%,1/2W,AA,T	
RS03	2001-001187	R-CARBON(S);75OHM,5%,1/2W,AA,T	
⚠RU01	2002-001010	R-COMPOSITION;1.8MOHM,10%,1/2W,AA,TP,3	
RU03	2001-000290	R-CARBON;10KOHM,5%,1/8W,AA,TP,	
RU04	2001-000577	R-CARBON;2KOHM,5%,1/8W,AA,TP,1	
RU05	2001-000577	R-CARBON;2KOHM,5%,1/8W,AA,TP,1	
RU06	2001-000577	R-CARBON;2KOHM,5%,1/8W,AA,TP,1	
RU07	2001-000429	R-CARBON;1Kohm,5%,1/8W,AA,TP,1.8x3.2mm	
RU08	2001-000005	R-CARBON;390OHM,5%,1/8W,AA,TP,	
RU09	2001-000005	R-CARBON;390OHM,5%,1/8W,AA,TP,	
RU10	2001-000005	R-CARBON;390OHM,5%,1/8W,AA,TP,	
RU12	2001-000290	R-CARBON;10KOHM,5%,1/8W,AA,TP,	
RU13	2001-000613	R-CARBON;3.9KOHM,5%,1/8W,AA,TP	
RU14	2004-001989	R-METAL;620OHM,5%,1/8W,AA,TP,1	
RU15	2004-001989	R-METAL;620OHM,5%,1/8W,AA,TP,1	
RU16	2004-001989	R-METAL;620OHM,5%,1/8W,AA,TP,1	
RU17	2001-000429	R-CARBON;1Kohm,5%,1/8W,AA,TP,1.8x3.2mm	
RU18	2001-000429	R-CARBON;1Kohm,5%,1/8W,AA,TP,1.8x3.2mm	
RU19	2001-000429	R-CARBON;1Kohm,5%,1/8W,AA,TP,1.8x3.2mm	
RU20	2001-000429	R-CARBON;1Kohm,5%,1/8W,AA,TP,1.8x3.2mm	
RUD03	2001-000281	R-CARBON;100OHM,5%,1/8W,AA,TP,	
RUD04	2001-000281	R-CARBON;100OHM,5%,1/8W,AA,TP,	
RUD08	2001-000435	R-CARBON;1MOHM,5%,1/8W,AA,TP,1	
RUD09	2001-000273	R-CARBON;100KOHM,5%,1/8W,AA,TP	
RUD13	2004-001165	R-METAL;62Kohm,1%,1/8W,AA,TP,1.8x3.2mm	

Loc. No.	Code No.	Description ; Specification	Remark
RUD24	2001-000591	R-CARBON;3.3KOHM,5%,1/8W,AA,TP	
RUD25	2001-000007	R-CARBON;3KOHM,5%,1/8W,AA,TP,1	
RUD30	2001-000613	R-CARBON;3.9KOHM,5%,1/8W,AA,TP	
RUD40	2001-000429	R-CARBON;1Kohm,5%,1/8W,AA,TP,1.8x3.2mm	
RUD41	2001-000947	R-CARBON;7.5KOHM,5%,1/8W,AA,TP	
RUD42	2001-000429	R-CARBON;1Kohm,5%,1/8W,AA,TP,1.8x3.2mm	
RUD43	2001-000947	R-CARBON;7.5KOHM,5%,1/8W,AA,TP	
⚠RX01	2001-000010	R-CARBON;68Kohm,5%,1/8W,AA,TP,1.8x3.2mm	
⚠RX02	2001-000522	R-CARBON;22KOHM,5%,1/8W,AA,TP,	
⚠RX03	2001-000522	R-CARBON;22KOHM,5%,1/8W,AA,TP,	
⚠RX04	2001-000766	R-CARBON;43KOHM,5%,1/8W,AA,TP,	
⚠RX05	2001-000313	R-CARBON;11KOHM,5%,1/8W,AA,TP,	
SF101	2904-000287	FILTER-SAW AV;45.75MHz,SIP5P,ST,12.5dB,	
SF102	2904-000289	FILTER-SAWAV;45.75MHZ,SIP5P,ST	
SW901	3404-000244	SWITCH-TACT;15V,20MA,90-170GF,	
SW902	3404-000244	SWITCH-TACT;15V,20MA,90-170GF,	
SW903	3404-000244	SWITCH-TACT;15V,20MA,90-170GF,	
SW904	3404-000244	SWITCH-TACT;15V,20MA,90-170GF,	
SW905	3404-000244	SWITCH-TACT;15V,20MA,90-170GF,	
SWN01	3404-001004	SWITCH TACT;12V,50MA,160GF8.4X22.7MM	
T201	AA26-10005E	TRANS-IF;-,7MM,IF,0.136UH,7MM,	
⚠T401	AA26-50001R	TRANS HORIZ DRIVE;80MH,580UH,4UH,G11AEI1	
⚠T444	AA26-30005Q	TRANS-FLYBACK;-,FUH-29A001(S),29/25,130	
⚠T801	AA26-20007Z	TRANS-SWITCHING;-,90~260,130/15.5/12/8V,	
⚠TU01	AA40-10006U	TUNER-F/S;TECC1070PG31A(S)	
⚠V999	3704-000114	SOCKET CRT;14P,29.1,35.5SN,1SH09S/BK	
X202	2801-003298	CRYSTAL-UNIT;3.579545MHZ,30PPM	
X901	2801-003224	CRYSTAL-UNIT;32.768KHZ,20PPM,2	
Z201	2903-001022	FILTER-CERAMIC;TR,4.5MHZ	
Z601	2903-000135	FILTER-CERAMIC;BP,4.5MHZ	
		ASSY-ACCESSORY	
I/B	AA68-00057A	MANUAL-USERS;K51A,ENG,-,B5,W/P 100(G),'Ì	
		ASSY-CRT	
A/CRTP	AA94-50018E	ASSY-CRT;A63AFW32X,+380MG,26,100DEG	
C-Y	AA27-00002A	MAGNET-CONVERGENCE;JH291-SC-OB,29.1M	
⚠CRT	L1000-0027	CRT-COLOR25;A63AFW32X(DARKTIN	
D-Y	AA27-50004C	deflection yoke	
SPACER	AA63-60028A	SPACER-DY;-,NEOPRENE,-,BLK,V0W	
		ASSY-PCB,A/V	
A/A-V	LA97-90003N	ASSY-PCB,A/V;-,KCT52A,K51A-,-,S	
CE60	2401-000480	C-AL;10UF,20%,50V,GP,5X11MM,5M	
CE61	2401-000480	C-AL;10UF,20%,50V,GP,5X11MM,5M	
CN602B	AA39-20069D	LEAD-CONNECTOR,ASSY;-,YBNH025-	
JB01	3722-000500	JACK-RCA;3P(S),-,-,AG	
JE60	3722-000143	JACK-PHONE;1P,3.4MM,-,MBAG	
LEAD/C	AA39-20112D	LEAD-CONNECTOR,ASSY;-,YBNH025-	
RE60	2001-001077	R-CARBON(S);150OHM,5%,1/2W,AA,	
RE61	2001-001077	R-CARBON(S);150OHM,5%,1/2W,AA,	
		ASSY-CABINET,FRONT	
A/FRNT	AA92-30241A	ASSY-CABINET,FRONT;CT25B7,VO,K51A.UCX	
BADGE	AA64-70117B	BADGE-BRAND;AL,SS,R2000,25,SILVER CT-633	
F/C	AA64-31346A	CABINET-FRONT;HIPSVOBLKBK708P	
CWS	AA65-30018A	CLAMP-WIRE;-,NYLON6.6,-,-,DATL	
CW	AA65-30105A	CLAMP-WIRE;NYLON 66N,VO,NTR,15MM	
D-COIL	AA27-20001W	COIL-DEGAUSSING;-,25,7.5OHM,3	
CDCOIL	L9400-0001	HOLDER-DEGAUSSING;25POLYVINYLCHLORIDEFL	
IL	AA64-40525A	INDICATOR-LED;ACRYLCLR	
KC	AA64-10803A	KNOB-CONTROL;ABSHBBLK	
KP	AA64-10804A	KNOB-POWER;ABSHBBLK	
L/SPK	AA39-20111B	LEAD-CONNECTOR,ASSY;-,YSH025-0	
CRT+CF	AA60-10050R	SCREW-ASSY;WC,HH,+M5,L31.5,SWR	
PAV+CF	AA60-10002A	SCREW-TAPPING;-,RH,+,M4,L12,ZP	
SPK+CF	6002-000514	SCREW-TAPPING;RH,+,2,M4,L15,ZP	

Downloaded from www.Manualslib.com manuals search engine

Loc. No.	Code No.	Description ; Specification	Remark
WIN+CF	6002-000514	SCREW-TAPPING;RH,+,2,M4,L15,ZP	
KC+CF	6002-000514	SCREW-TAPPING;RH,+,2,M4,L15,ZP	
SPK	3001-001038	SPEAKER;6W,16OHM,92DB,140HZ	
SPRING	AA61-60003J	SPRING-CS;-,-,SUS304,0.5,OD6,H	
STOPPER	AA61-40113A	STOPPER-PCB;-,ABS,HB,NTR.	
S-CRT	AA61-40042A	SUPPORT-CRT;-,HIPS,VO,BLK,-,-,	
WR	AA64-40524A	WINDOW-REMOTE;PCVIOLET	
		ASSY-CABINET	
A/BACK	AA92-10232A	ASSY-CABINET(COM);CT25B7,VO,K51A,UCX	
B/C	AA64-31348A	CABINET-BACK;HIPSVOBLK	
CORD/C	AA65-30008A	CLAMP-CORD;-,PE,HB,BLK,-,-	
CFBT	AA65-30109A	CLAMP-FBT;NYLON-66,V2,BLK,-,-,-	
RCA+CB	6002-000514	SCREW-TAPPING;RH,+,2,M4,L15,ZP	
CB+CF	6002-000514	SCREW-TAPPING;RH,+,2,M4,L15,ZP	
CABBAC	AA63-60001X	SPACER-FELT;-,FELT,T0.5,-,330X	

6-8 TXJ2754 (TXJ2879 and TXJ2754 Dissimilar Parts)

Loc. No.	Code No.	Description ; Specification	Remark
		ASSY-PCB,MAIN	
*	AA97-10063C	ASSY-PCB,MAIN(COM);TXJ2754/,K51A,U.S	
C205	2301-000016	C-FILMPEF;22NF,5%,100V,TP,7.2	
C239	2401-002229	C-AL;470NF,20%,50V,WT,TP,5X11	
⚠ C402	2303-001015	C-FILM,PPFF;5.5NF,5%,1.6KV,TP	
C815	2401-000293	C-ELECTROLYTIC;CE04WTAPG200V1	
IC201	1204-001174	ICHOR/VERPROCESS;TDA8373A,DIP	
JA701	3722-001103	JACKRCA;5P	
L401B	AA27-30003H	COIL-LINEARITY;-,50UH,DR14X20	
⚠ Q401	0502-000209	TR-POWER;2SD1880,NPN,1500V,80	
R211	2001-000864	R-CARBON;56Kohm,5%,1/8W,AA,TP,1.8x3.2mm	
R217	2001-000011	R-CARBON;75Kohm,5%,1/8W,AA,TP,1.8x3.2mm	
R219	2001-000864	R-CARBON;56Kohm,5%,1/8W,AA,TP,1.8x3.2mm	
R239	2001-000864	R-CARBON;56Kohm,5%,1/8W,AA,TP,1.8x3.2mm	
R250	2001-000066	R-CARBON(S);10KOHM,5%,1/2W,AA	
R301	2001-001045	R-CARBON(S);1.2KOHM,5%,1/2W,A	
R302	2001-001045	R-CARBON(S);1.2KOHM,5%,1/2W,A	
R411	2004-001408	R-METAL(S);91KOHM,1%,1/2W,AA,	
⚠ R412	2004-001408	R-METAL(S);91KOHM,1%,1/2W,AA,	
R808	2004-001889	R-METAL(S);127KOHM,1%,1/2W,AA,TP,2.5X6.5	
⚠ RX05	2001-000313	R-CARBON;11KOHM,5%,1/8W,AA,TP	
⚠ T444	AA26-00013A	TRANS-FLYBACK;-,FUH29A001A,27	
		ASSY-CRT	
*	AA94-50018F	ASSY-CRT;A68ADT25X01,+380MG,29,111DE	
⚠	AA03-10026A	CRT-COLOR;A68ADT25X01,+380MG,29,111DE	
	AA39-20568A	LEAD CONNECTOR ASSY;YFHS06-06,S,6(4)P	
		ASSY-ACCESSORY	
	AA68-00057B	MANUAL-USERS;K51A,ENG,µfiÇ¥Áö2~1µµ,B5,W/P	SEA
	AA68-11371A	MANUAL-USERS;K51A,FRE,TM58,B5,W/P 100(G)	SECA

Loc. No.	Code No.	Description ; Specification	Remark
		REMOCON	
	AA59-10113B	REMOCON;DP,TM59,-,-,-,-,-,-,AA59-10110B,	SEA
	AA59-10113H	REMOCON;DP,TM59,-,-,-,-,-,-,AA59-10110H,	SECA
		ASSY-CABINET,(COM)	
*	AA90-70122A	ASSY-CABINET,(COM);CT-683B,TXH2756/XAA	SEA
*	AA90-70121D	ASSY-CABINET(COM);CT-683B,KCT57A,SECA,27	SECA
	AA64-31149A	CABINET-BACK;HIPS VO BLK CT68	
		ASSY-CABINET,FRONT	
*	AA91-10351E	ASSY-CABINET,FRONT; 2756,PA100,VO,BLK	SEA
*	AA91-10351F	ASSY-CABINET,FRONT;CT-683B,KCT57A,SECA27	SECA
	AA64-70010A	BADGE-BRAND;-,AL,-,L50,SILVER	
	AA64-31148A	CABINET-FRONT;HIPS VO BLK CT6	
	L2479-029-440	DEGAUSSING-COIL;SINGLE-VOLTAGE,27.	
	AA64-40473A	INDICATOR-LED;PMMA CLR CT-633	
	AA64-10732A	KNOB-CONTROL;ABS HB BLK CT-63	
	AA64-10733A	KNOB-POWER;ABS HB BLK CT-633	
	AA39-20111B	LEAD-CONNECTOR,ASSY;-,YSH025-	
	3001-001039	SPEAKER;160HM,3W	
	AA61-60003T	SPRING-CS;-,-,SUS304,0.5,OD7,	
	AA64-40472A	WINDOW-REMOTE;PCVIOLET CT-633	

Downloaded from www.Manualslib.com manuals search engine

6-9 TXJ2766 (TXJ2879 and TXJ2766 Dissimilar Parts)

Loc. No.	Code No.	Description ; Specification	Remark
		ASSY-PCB,MAIN	
*	AA97-10063F	ASSY-PCB,MAIN(OPT);TXJ2766,K51A,SAM	
⚠ C402	2303-000128	C-FILM,PPF;12NF,5%,1.6KV,-,-,	
C404	2306-000235	C-FILM;CF922P400VT564-J-40/85	
CB19	2306-001018	C-FILM,MPPF;39nF,5%,400V,TP,19x7x14,7.5m	
CN602	3711-002644	POST-HEADER;67094-005(AUTO)	
JA701	3722-001103	JACKRCA;5P	
L401B	AA27-30003G	COIL-LINEARITY;-,44UH,DR14X15	
R211	2001-000864	R-CARBON;56Kohm,5%,1/8W,AA,TP,1.8x3.2mm	
R239	2001-000864	R-CARBON;56Kohm,5%,1/8W,AA,TP,1.8x3.2mm	
R250	2001-001155	R-CARBON(S);5.6Kohm,5%,1/2W,AA,TP,2.4x6.	
R301	2001-001044	R-CARBON(S);1.1KOHM,5%,1/2W,A	
R302	2001-001044	R-CARBON(S);1.1KOHM,5%,1/2W,A	
R411	2004-001899	R-METAL(S);61.9KOHM,1%,1/2W,A	
R412	2004-001404	R-METAL(S);72KOHM,1%,1/2W,AA,TP,2.4X6.4M	
R413	2003-000008	R-METALOXIDE(S);100ohm,5%,1W,AA,TP,3.3x9	
R808	2004-001889	R-METAL(S);127KOHM,1%,1/2W,AA,TP,2.5X6.5	
RE06	2001-001088	R-CARBON(S);1KOHM,5%,1/2W,AA,TP,2.4X6.4	
RX05	2001-000313	R-CARBON;11KOHM,5%,1/8W,AA,TP	
⚠ T444	AA26-30005Q	TRANS-FLYBACK;-,FUH-29A001(S),29/25,130	
		ASSY-PCB,A/V	
*	LA97-90003N	ASSY-PCB,A/V;-,KCT52A,K51A-,-	
JE60	3722-000143	JACK-PHONE;1P,3.4MM,-,MBAG	
CN602B	AA39-20069D	LEAD-CONNECTOR,ASSY;-,YBNH025	
RE60	2001-001077	R-CARBON(S);150OHM,5%,1/2W,AA	
RE61	2001-001077	R-CARBON(S);150OHM,5%,1/2W,AA	
JB01	3722-000500	JACK-RCA;3P(S),-,-,AG	
		ASSY-CABINET,FRONT	
*	AA92-30240A	ASSY-CABINET,FRONT;CT27B7,VO,K51A,UCX	SEA
*	AA92-30240B	ASSY-CABINET,FRONT;CT27B7,VO,K51A.CCX	SECA
	AA64-31345A	CABINET-FRONT;HIPSVOBLKBK708P	
	L2479-029-440	DEGAUSSING-COIL;SINGLE-VOLTAGE,27.	
	AA64-40525A	INDICATOR-LED;ACRYLCLR	

Loc. No.	Code No.	Description ; Specification	Remark
	AA64-10803A	KNOB-CONTROL;ABSHBBLK	
	AA64-10804A	KNOB-POWER;ABSHBBLK	
	AA39-20111B	LEAD-CONNECTOR,ASSY;-,YSH025-	
	3001-000190	SPEAKER;5W,8OHM,89DB,150HZ	
	AA61-60003J	SPRING-CS;-,-,SUS304,0.5,OD6,	
	AA61-40113A	STOPPER-PCB;-,ABS,HB,NTR.	
	AA61-40042A	SUPPORT-CRT;-,HIPS,VO,BLK,-,-	
	AA64-40524A	WINDOW-REMOTE;PCVIOLET	
		ASSY-CABINET	
*	AA92-10232B	ASSY-CABINET(COM);CT27B7,VO,K51A,UCX	SEA
*	AA92-10232D	ASSY-CABINET(COM);CT27B7,VO,K51A,CCX	SECA
	AA63-60001X	SPACER-FELT;-,FELT,T0.5,-,330	
	AA64-31347A	CABINET-BACK;HIPSVOBLK	
		ASSY-CRT	
*	AA94-50014J	ASSY-CRT;A68KVL74X01(D),+380mG,29,ITC,	
⚠	AA03-10017L	CRT-COLOR;A68KVL74X01(D),+380MG,29,11	
		ASSY-ACCESSORY	
*	AA68-00057B	MANUAL-USERS;K51A,ENG,µfiÇ¥Áö2~1µµ,B5,W/P	SEA
*	AA68-11371A	MANUAL-USERS;K51A,FRE,TM58,B5,W/P 100(G)	SECA
		REMOCON	
	AA59-10112D	REMOCON;DP,TM58,-,-,-,-,-,-,AA59-10109D,	
	AA59-10112J	REMOCON;DP,-,TM58,AA59-10109H,-,-,-,-, 2767CCX	

Downloaded from www.Manualslib.com manuals search engine

6-10 TXJ2767 (TXJ2879 and TXJ2767 Dissimilar Parts)

Loc. No.	Code No.	Description ; Specification	Remark
		ASSY-PCB,MAIN	
*	AA97-10063E	ASSY-PCB,MAIN(OPT);TXJ2767,K51A,SAM	
⚠ C402	2303-000128	C-FILM,PPF;12NF,5%,1.6KV,-,-,	
C404	2306-000235	C-FILM;CF922P400VT564-J-40/85	
CN602	3711-002644	POST-HEADER;67094-005(AUTO)	
CB19	2306-001018	C-FILM,MPPF;39nF,5%,400V,TP,19x7x14,7.5m	
L401B	AA27-30003G	COIL-LINEARITY;-,44UH,DR14X15	
R211	2001-000864	R-CARBON;56Kohm,5%,1/8W,AA,TP,1.8x3.2mm	
R239	2001-000864	R-CARBON;56Kohm,5%,1/8W,AA,TP,1.8x3.2mm	
R301	2001-001044	R-CARBON(S);1.1KOHM,5%,1/2W,A	
R302	2001-001044	R-CARBON(S);1.1KOHM,5%,1/2W,A	
R808	2004-001889	R-METAL(S);127KOHM,1%,1/2W,AA,TP,2.5X6.5	
R412	2004-001404	R-METAL(S);72KOHM,1%,1/2W,AA,TP,2.4X6.4M	
R411	2004-001899	R-METAL(S);61.9KOHM,1%,1/2W,A	
R413	2003-000008	R-METALOXIDE(S);100ohm,5%,1W,AA,TP,3.3x9	
R250	2001-001155	R-CARBON(S);5.6Kohm,5%,1/2W,AA,TP,2.4x6.	
RE06	2001-001088	R-CARBON(S);1KOHM,5%,1/2W,AA,TP,2.4X6.4	
RX05	2001-000313	R-CARBON;11KOHM,5%,1/8W,AA,TP	
⚠ T444	AA26-30005Q	TRANS-FLYBACK;-,FUH-29A001(S),29/25,130	
		ASSY-PCB,A/V	
*	LA97-90003N	ASSY-PCB,A/V;-,KCT52A,K51A-,-	
JE60	3722-000143	JACK-PHONE;1P,3.4MM,-,MBAG	
CN602B	AA39-20069D	LEAD-CONNECTOR,ASSY;-,YBNH025	
RE60	2001-001077	R-CARBON(S);150OHM,5%,1/2W,AA	
RE61	2001-001077	R-CARBON(S);150OHM,5%,1/2W,AA	
01VER	AA41-10329B	PCB-F/AV;KV2,1,FR-1,245x245x1.6T	
JB01	3722-000500	JACK-RCA;3P(S),-,-,AG	
		ASSY-CABINET,FRONT	
*	AA92-30240A	ASSY-CABINET,FRONT;CT27B7,VO,K51A,UCX	SEA
	AA92-30240B	ASSY-CABINET,FRONT;CT27B7,VO,K51A.CCX	SECA

Loc. No.	Code No.	Description ; Specification	Remark
	AA64-31345A	CABINET-FRONT;HIPSVOBLKBK708P	
	L2479-029-440	DEGAUSSING-COIL;SINGLE-VOLTAGE,27.	
	AA64-40525A	INDICATOR-LED;ACRYLCLR	
	AA64-10803A	KNOB-CONTROL;ABSHBBLK	
	AA64-10804A	KNOB-POWER;ABSHBBLK	
	AA39-20111B	LEAD-CONNECTOR,ASSY;-,YSH025-	
	3001-000190	SPEAKER;5W,8OHM,89DB,150HZ	
	AA61-60003J	SPRING-CS;-,-,SUS304,0.5,OD6,	
	AA61-40113A	STOPPER-PCB;-,ABS,HB,NTR.	
	AA61-40042A	SUPPORT-CRT;-,HIPS,VO,BLK,-,-	
	AA64-40524A	WINDOW-REMOTE;PCVIOLET	
		ASSY-CABINET	
	AA92-10232B	ASSY-CABINET(COM);CT27B7,VO,K51A,UCX	SEA
	AA92-10232D	ASSY-CABINET(COM);CT27B7,VO,K51A,CCX	SECA
	AA63-60001X	SPACER-FELT;-,FELT,T0.5,-,330	
	AA64-31347A	CABINET-BACK;HIPSVOBLK	
		ASSY-CRT	
	AA94-50014J	ASSY-CRT;A68KVL74X01(D),+380mG,29,ITC,	
⚠	AA03-10017L	CRT-COLOR;A68KVL74X01(D),+380MG,29,11	
		ASSY-ACCESSORY	
	AA68-00057B	MANUAL-USERS;K51A,ENG,µfiÇ¥Áö2~1µµ,B5,W/P	SEA
	AA68-11371A	MANUAL-USERS;K51A,FRE,TM58,B5,W/P 100(G)	SECA
		REMOCON	
	AA59-10112D	REMOCON;DP,TM58,-,-,-,-,-,AA59-10109D,	SEA
	AA59-10112J	REMOCON;DP,-,TM58,AA59-10109H,-,-,-,-,	SECA

Downloaded from www.Manualslib.com manuals search engine

6-11 TXJ2768 (TXJ2879 and TXJ2768 Dissimilar Parts)

Loc. No.	Code No.	Description ; Specification	Remark
		ASSY-PCB,MAIN	
*	AA97-10063D	ASSY-PCB,MAIN(OPT);TXJ2768,K51A,SAM	
⚠ C402	2303-000128	C-FILM,PPF;12NF,5%,1.6KV,-,-,	
C404	2306-000235	C-FILM;CF922P400VT564-J-40/85	
CB19	2306-001018	C-FILM,MPPF;39nF,5%,400V,TP,19x7x14,7.5m	
CN602	3711-002644	POST-HEADER;67094-005(AUTO)	
CNP01	AA95-00122A	ASSY-PCB,PIP;DP(CKD),CT5072BPZ,K51A,NTSC	
D808	0402-000233	DIODE-RECTIFIER;FML-G12S,200V	
IC854	1203-000274	IC-POSI.FIXEDREG.;7805,TO-220	
L401B	AA27-30003G	COIL-LINEARITY;-,44UH,DR14X15	
R211	2001-000864	R-CARBON;56Kohm,5%,1/8W,AA,TP,1.8x3.2mm	
R239	2001-000864	R-CARBON;56Kohm,5%,1/8W,AA,TP,1.8x3.2mm	
R250	2001-001155	R-CARBON(S);5.6Kohm,5%,1/2W,AA,TP,2.4x6.	
R301	2001-001044	R-CARBON(S);1.1KOHM,5%,1/2W,A	
R302	2001-001044	R-CARBON(S);1.1KOHM,5%,1/2W,A	
R411	2004-001899	R-METAL(S);61.9KOHM,1%,1/2W,A	
R412	2004-001404	R-METAL(S);72KOHM,1%,1/2W,AA,TP,2.4X6.4M	
R413	2003-000008	R-METALOXIDE(S);100ohm,5%,1W,AA,TP,3.3x9	
R808	2004-001889	R-METAL(S);127KOHM,1%,1/2W,AA,TP,2.5X6.5	
RE06	2001-001088	R-CARBON(S);1KOHM,5%,1/2W,AA,TP,2.4X6.4	
⚠ RX05	2001-000313	R-CARBON;11KOHM,5%,1/8W,AA,TP	
⚠ T444	AA26-30005Q	TRANS-FLYBACK;-,FUH-29A001(S),29/25,130	
		ASSY-PCB,A/V	
*	LA97-90003N	ASSY-PCB,A/V;-,KCT52A,K51A-,-	
CN602B	AA39-20069D	LEAD-CONNECTOR,ASSY;-,YBNH025	
JB01	3722-000500	JACK-RCA;3P(S),-,-,AG	
JE60	3722-000143	JACK-PHONE;1P,3.4MM,-,MBAG	
RE60	2001-001077	R-CARBON(S);150OHM,5%,1/2W,AA	
RE61	2001-001077	R-CARBON(S);150OHM,5%,1/2W,AA	
		ASSY-CABINET,FRONT	
AA92-30240A		ASSY-CABINET,FRONT;CT27B7,VO,K51A,UCX	SEA
AA92-30240B		ASSY-CABINET,FRONT;CT27B7,VO,K51A.CCX	SECA
AA61-40113A		STOPPER-PCB;-,ABS,HB,NTR.	
AA64-31345A		CABINET-FRONT;HIPSVOBLKBK708P	
AA61-60003J		SPRING-CS;-,-,SUS304,0.5,OD6,	
AA64-10803A		KNOB-CONTROL;ABSHBBLK	
AA64-40524A		WINDOW-REMOTE;PCVIOLET	
AA64-40525A		INDICATOR-LED;ACRYLCLR	
AA64-10804A		KNOB-POWER;ABSHBBLK	

Loc. No.	Code No.	Description ; Specification	Remark
L2479-029-440		DEGAUSSING-COIL;SINGLE-VOLTAGE,27.	
AA39-20111B		LEAD-CONNECTOR,ASSY;-,YSH025-	
3001-000190		SPEAKER;5W,8OHM,89DB,150HZ	
AA61-40042A		SUPPORT-CRT;-,HIPS,VO,BLK,-,-	
		ASSY-CABINET	
AA92-10232E		ASSY-CABINET(COM);CT27B7,VO,K51A,UCX,PIP	SEA
AA92-10232F		ASSY-CABINET(COM);CT27B7,VO,K51A,CCX,PIP	SECA
AA63-60001X		SPACER-FELT;-,FELT,T0.5,-,330	
AA64-31347A		CABINET-BACK;HIPSVOBLK	
		ASSY-CRT	
AA94-50014J		ASSY-CRT;A68KVL74X01(D),+380mG,29,ITC,	
⚠ AA03-10017L		CRT-COLOR;A68KVL74X01(D),+380MG,29,11	
		ASSY-ACCESSORY	
AA68-00057B		MANUAL-USERS;K51A,ENG,µfiÇ¥Áö2~1µµ,B5,W/P	SEA
AA68-11371A		MANUAL-USERS;K51A,FRE,TM58,B5,W/P 100(G)	SECA
		REMOCON	
AA59-10112B		REMOCON;DP,TM58,-,-,-,-,-,-,AA59-10109B,	SEA
AA59-10112G		REMOCON;DP,-,TM58,AA59-10109F,-,-,-,-,	SECA

Downloaded from www.Manualslib.com manuals search engine

6-12 TXJ2879

ASSY-PCB,MAIN

Loc. No.	Code No.	Description ; Specification	Remark
A/MAIN	AA94-10147A	ASSY-PCB,MAIN(OPT);TXJ2879,K51A,USA	
C101	2401-000962	C-AL;22uF,20%,50V,GP,TP,5x11,5	
C102	2401-001363	C-AL;470UF,20%,16V,GP,TP,10X12	
C104	2202-000127	C-CERAMIC,MLC-AXIAL;10NF,+80-2	
C105	2401-001333	C-ELECTROLYTIC;CE04WTAPG50V0.4	
C106	2202-000127	C-CERAMIC,MLC-AXIAL;10NF,+80-2	
C107	2401-001333	C-ELECTROLYTIC;CE04WTAPG50V0.4	
C108	2401-000480	C-AL;10UF,20%,50V,GP,5X11MM,5M	
C110	2401-001840	C-AL;100UF,20%,16V,GP,TP,6.3X1	
C111	2202-000286	C-CERAMIC,MLC-AXIAL;56PF,5%,50	
C112	2202-000127	C-CERAMIC,MLC-AXIAL;10NF,+80-2	
C113	2202-000127	C-CERAMIC,MLC-AXIAL;10NF,+80-2	
C116	2202-000127	C-CERAMIC,MLC-AXIAL;10NF,+80-2	
C117	2202-000127	C-CERAMIC,MLC-AXIAL;10NF,+80-2	
C202	2305-000665	C-FILM;CF922N63VT104-J-40/1053	
C203	2305-000665	C-FILM;CF922N63VT104-J-40/1053	
C204	2401-000660	C-ELECTROLYTIC;CE04WTAPG50V2.2	
C205	2301-000224	C-FILM,PEF;22NF,5%,50V,7.4X3.9	
C206	2202-002037	C-CERAMIC,MLC-AXIAL;100NF,+80-20	
C209	2202-002037	C-CERAMIC,MLC-AXIAL;100NF,+80-20	
C210	2401-001840	C-AL;100UF,20%,16V,GP,TP,6.3X1	
C211	2305-000665	C-FILM;CF922N63VT104-J-40/1053	
C212	2202-002037	C-CERAMIC,MLC-AXIAL;100NF,+80-20	
C213	2305-000665	C-FILM;CF922N63VT104-J-40/1053	
C217	2202-000819	C-CERAMIC,MLC-AXIAL;47NF,+80-2	
C223	2201-000258	C-CERAMIC,DISC;17PF,5%,50V,NPO,-,5MM,TP	
C224	2301-000445	C-FILM,PEF;4.7nF,5%,50V,TP,5.5x7x3mm,5mm	
C225	2305-000665	C-FILM;CF922N63VT104-J-40/1053	
C226	2401-001840	C-AL;100UF,20%,16V,GP,TP,6.3X1	
C227	2305-000665	C-FILM;CF922N63VT104-J-40/1053	
C228	2401-000660	C-ELECTROLYTIC;CE04WTAPG50V2.2	
C229	2301-000342	C-FILM,PEF;2.2nF,5%,50V,TP,7.4x3.9x13mm,	
C230	2202-000162	C-CERAMIC,MLC-AXIAL;15PF,5%,50	
C232	2301-000445	C-FILM,PEF;4.7nF,5%,50V,TP,5.5x7x3mm,5mm	
C233	2401-000603	C-AL;1UF,20%,50V,GP,5X11MM,5MM	
C234	2309-000138	C-FILM,PE-PPF;100NF,5%,50V,TP,	
C235	2202-000286	C-CERAMIC,MLC-AXIAL;56PF,5%,50	
C237	2305-000149	C-FILM;CF922N100VT104-J-40/105	
C239	2401-000603	C-AL;1UF,20%,50V,GP,5X11MM,5MM	
C240	2201-000379	C-CERAMIC,DISC;22NF,+80-20%,50	
C242	2401-000480	C-AL;10UF,20%,50V,GP,5X11MM,5M	
C243	2201-000483	C-CERAMIC,DISC;33PF,5%,50V,NPO	
C244	2401-000660	C-ELECTROLYTIC;CE04WTAPG50V2.2	
C250	2301-000383	C-FILM,PEF;10nF,5%,50V,TP,6x7x3.2mm,5mm	
C267	2202-000183	C-CERAMIC;CKOAX7R16VT222-MEP05	
C302	2401-000360	C-AL;100UF,20%,50V,GP,8X11MM,5	
C303	2305-000149	C-FILM;CF922N100VT104-J-40/105	
C304	2305-000285	C-FILM,MPEF;220NF,5%,100V,-,5M	
C305	2201-000259	C-CERAMIC,DISC;180PF,10%,500V,Y5P,6X4MM,	
C306	2401-000360	C-AL;100UF,20%,50V,GP,8X11MM,5	
C308	2301-000254	C-FILM,PEF;39NF,5%,50V,7.5X3.5X6.5MM,5MM	
C401	2201-000599	C-CERAMIC,DISC;560PF,10%,500V,	
⚠ C402	2306-000253	C-FILM;CF922P1.6KVT722-JBUP	
C404	2306-000204	C-FILM,MPPF;430NF,5%,400V,-,20	
C405	2301-000213	C-FILM,PEF;220NF,5%,250V,21.5X	
C406	2201-000556	C-CERAMIC,DISC;470PF,10%,500V,	
C407	2401-001397	C-AL;470UF,20%,25V,GP,10X16MM,	
C408	2201-000556	C-CERAMIC,DISC;470PF,10%,500V,	
C409	2401-001397	C-AL;470UF,20%,25V,GP,10X16MM,	
C410	2401-002268	C-ELEC;CE04-40/105250VT2R2-MWR	
C411	2201-000556	C-CERAMIC,DISC;470PF,10%,500V,	
C412	2401-000927	C-AL;22UF,20%,250V,GP,13X20MM,	
C413	2401-000302	C-AL;100UF,20%,25V,GP,6X11MM,5	
C414	2201-000984	C-CERAMIC,DISC;680PF,10%,2KV,Y	
C415	2303-000331	C-FILM;4.7NF,5%,630V,19.5X12X7	
C417	2301-000383	C-FILM,PEF;10nF,5%,50V,TP,6x7x3.2mm,5mm	
⚠ C419	2306-000329	C-FILM;CF922P1.6KVT702-H-25/+8	
C501	2305-000704	C-M,POLYESTER;CFS922MTAPG250V1	
C503	2401-001232	C-AL;4.7UF,20%,250V,GP,10X12.5	
C504	2202-000121	C-CERAMIC,MLC-AXIAL;100PF,10%,	
C505	2202-000121	C-CERAMIC,MLC-AXIAL;100PF,10%,	
C506	2202-000121	C-CERAMIC,MLC-AXIAL;100PF,10%,	
C510	2401-002264	C-AL;10UF,20%,350V,GP,TP,10X20	
C518	2201-002063	C-CERAMIC,DISC;10nF,+80-20%,3KV,Y5V,TP,1	
C520	2202-000862	C-CERAMIC;CCOASL50VT391-JUP050	
C610	2301-000192	C-FILM,PEF;1NF,5%,50V,5.3X10MM	
C627	2401-000603	C-AL;1UF,20%,50V,GP,5X11MM,5MM	
C628	2401-000471	C-AL;10UF,20%,50V,BP,6X11MM,5M	
C629	2401-000027	C-AL;4.7UF,20%,50V,GP,5*11MM,5MEA	
C631	2401-000603	C-AL;1UF,20%,50V,GP,5X11MM,5MM	
C632	2401-000471	C-AL;10UF,20%,50V,BP,6X11MM,5M	
C634	2401-001998	C-AL;1000UF,20%,25V,GP,TP,10X20	
C650	2202-000796	C-CERAMIC,MLC-AXIAL;1NF,10%,50	
C651	2202-000796	C-CERAMIC,MLC-AXIAL;1NF,10%,50	
C701	2401-000480	C-AL;10UF,20%,50V,GP,5X11MM,5M	
C702	2401-000302	C-AL;100UF,20%,25V,GP,6X11MM,5	
C703	2401-000603	C-AL;1UF,20%,50V,GP,5X11MM,5MM	
C704	2401-000603	C-AL;1UF,20%,50V,GP,5X11MM,5MM	
C706	2401-000027	C-AL;4.7UF,20%,50V,GP,5*11MM,5MEA	
C707	2401-000480	C-AL;10UF,20%,50V,GP,5X11MM,5M	
C708	2401-000480	C-AL;10UF,20%,50V,GP,5X11MM,5M	
C709	2401-000027	C-AL;4.7UF,20%,50V,GP,5*11MM,5MEA	
C712	2305-000708	C-FILM;CF922N100VT154-J-40/105	
C713	2305-000355	C-FILM,MPEF;330NF,5%,63V,-,5MM	
C714	2305-000355	C-FILM,MPEF;330NF,5%,63V,-,5MM	
C715	2305-000708	C-FILM;CF922N100VT154-J-40/105	
C716	2301-000289	C-FILM,PEF;5.6NF,5%,50V,6.5X5.	
C717	2301-000289	C-FILM,PEF;5.6NF,5%,50V,6.5X5.	
⚠ C801	2401-001387	C-AL;470uF,20%,250V,GP,BK,25.4x40,1	
C802	2201-000332	C-CERAMIC,AC;CK45PTAPGE250V222	
C803	2201-000332	C-CERAMIC,AC;CK45PTAPGE250V222	
C804	2303-000163	C-FILM,PPF;2.2NF,5%,800V,-,-,T	
C805	2201-000991	C-CERAMIC,HIC;CK45(T)B2KV561-K	
C806	2401-003026	C-AL;330UF,20%,200V,GP,ST,22X3	
C807	2201-000599	C-CERAMIC,DISC;560PF,10%,500V,	
C808	2401-001571	C-ELECTROLYTIC;CE04WTAPG50V47-	
C809	2401-000302	C-AL;100UF,20%,25V,GP,6X11MM,5	
C810	2401-000611	C-AL;1UF,20%,50V,WT,5X11MM,5MM	
C811	2401-000302	C-AL;100UF,20%,25V,GP,6X11MM,5	
C812	2401-000302	C-AL;100UF,20%,25V,GP,6X11MM,5	
C813	2401-002144	C-AL;47uF,20%,16V,GP,TP,5x11,5	
C815	2401-000786	C-ELECTROLYTIC;CE04W160V220M-M(18X37)	
C816	2401-000164	C-ALUMINUM;1000UF,20%,25V,WT,TP,12.5X20	
C817	2202-002037	C-CERAMIC,MLC-AXIAL;100NF,+80-20	
C820	2401-003141	C-AL;2200UF,20%,25V,WT,13X25,5	
⚠ C821	2201-000990	C-CERAMIC,AC;ECK-ZNS472MEX(RO)	
C822	2201-000963	C-CERAMIC;CK45Y5U400VACT102-MH	
⚠ C823	2201-000990	C-CERAMIC,AC;ECK-ZNS472MEX(RO)	
C825	2301-000310	C-FILM,PEF;68NF,5%,50V,8.0X8.5	
C827	2301-000224	C-FILM,PEF;22NF,5%,50V,7.4X3.9	
C834	2401-002288	C-ELEC;CE04-55/10525VT471-MWRG	
C855	2201-000599	C-CERAMIC,DISC;560PF,10%,500V,	
C861	2401-000287	C-AL;100UF,20%,16V,WT,6X11MM,5	
C862	2401-000480	C-AL;10UF,20%,50V,GP,5X11MM,5M	
⚠ C870	2306-000350	C-FILM,MPPF;270nF,5%,400V,BK,26x18.5x10,	
C873	2401-000302	C-AL;100UF,20%,25V,GP,6X11MM,5	
C890	2201-000374	C-CERAMIC,DISC;220pF,5%,50V,CH,TP,12.5x3	
C891	2201-000292	C-CERAMIC,DISC;1NF,10%,50V,Y5P	
C901	2401-002144	C-AL;47uF,20%,16V,GP,TP,5x11,5	
C902	2202-000796	C-CERAMIC,MLC-AXIAL;1NF,10%,50	
C903	2401-002144	C-AL;47uF,20%,16V,GP,TP,5x11,5	
C904	2202-000796	C-CERAMIC,MLC-AXIAL;1NF,10%,50	
C905	2401-001333	C-ELECTROLYTIC;CE04WTAPG50V0.4	
C906	2202-000121	C-CERAMIC,MLC-AXIAL;100PF,10%,	
C907	2401-002144	C-AL;47uF,20%,16V,GP,TP,5x11,5	
C908	2201-000573	C-CERAMIC,DISC;47PF,5%,50V,NPO	
C909	2201-000193	C-CERAMIC,DISC;10PF,0.25PF,50V	
C910	2201-000119	C-CERAMIC,DISC;100NF,+80-20%,5	
C911	2401-000302	C-AL;100UF,20%,25V,GP,6X11MM,5	
C912	2301-000383	C-FILM,PEF;10nF,5%,50V,TP,6x7x3.2mm,5mm	

Downloaded from www.Manualslib.com manuals search engine

Loc. No.	Code No.	Description ; Specification	Remark
C913	2202-000127	C-CERAMIC,MLC-AXIAL;10NF,+80-2	
C914	2202-000286	C-CERAMIC,MLC-AXIAL;56PF,5%,50	
C920	2202-000263	C-CERAMIC,MLC-AXIAL;470PF,10%,50V,Y5P,3.	
CB01	2306-000318	C-FILM,MPPF;220NF,20%,250V,-,2	
CB19	2303-001026	C-FILM,PPF;33nF,10%,400V,TP,20x15x8,7.5	
CD10	2401-000603	C-AL;1UF,20%,50V,GP,5X11MM,5MM	
CD11	2401-001989	C-AL;4.7uF,20%,50V,BP,TP,5x11,5	
CD12	2401-000480	C-AL;10UF,20%,50V,GP,5X11MM,5M	
CD26	2401-001026	C-AL;3.3UF,20%,50V,GP,5X11MM,5	
CE01	2401-002597	C-AL;220uF,20%,35V,GP,TP,10x12.5,5	
CE03	2401-001527	C-AL;47UF,20%,250V,HR,13X25MM,	
CE04	2305-000470	C-FILM,MPEF;68NF,5%,100V,-,5MM	
CN501B	AA39-20604A	LEAD CONNECTOR-ASSY;-,YBNH250-09,YBNH05/	
CN601	3711-002643	POST-HEADER;YW025-04(AUTO)	
CN701	3711-002648	POST-HEADER;67094-009(AUTO)	
CORD/H	AA61-20284A	HOLDER P CORD;PP,VO,BLK,KE-002	
CORD/P	AA39-10007Y	POWER-CORD;-,EP2/YES,SPT-2 18AWGx2C,2.4m	
CP01	2301-000224	C-FILM,PEF;22NF,5%,50V,7.4X3.9	
CP02	2301-000224	C-FILM,PEF;22NF,5%,50V,7.4X3.9	
CP03	2305-000665	C-FILM;CF922N63VT104-J-40/1053	
CP04	2305-000665	C-FILM;CF922N63VT104-J-40/1053	
CP05	2401-001496	C-AL;47UF,20%,16V,GP,5X7MM,5MM	
CU02	2202-002037	C-CERAMIC,MLC-AXIAL;100NF,+80-20	
CU06	2401-000480	C-AL;10UF,20%,50V,GP,5X11MM,5M	
CU11	2202-002037	C-CERAMIC,MLC-AXIAL;100NF,+80-20	
CU12	2202-002037	C-CERAMIC,MLC-AXIAL;100NF,+80-20	
CU13	2202-002037	C-CERAMIC,MLC-AXIAL;100NF,+80-20	
CU33	2401-001989	C-AL;4.7uF,20%,50V,BP,TP,5x11,5	
CUD06	2401-001989	C-AL;4.7uF,20%,50V,BP,TP,5x11,5	
CUD08	2301-000289	C-FILM,PEF;5.6NF,5%,50V,6.5X5.	
CUD09	2301-000160	C-FILM,PEF;12NF,5%,50V,11.0X6.	
CUD15	2401-000027	C-AL;4.7UF,20%,50V,GP,5*11MM,5MEA	
CUD18	2401-001840	C-AL;100UF,20%,16V,GP,TP,6.3X1	
CUD20	2401-001989	C-AL;4.7uF,20%,50V,BP,TP,5x11,5	
CUD21	2401-000027	C-AL;4.7UF,20%,50V,GP,5*11MM,5MEA	
CUD23	2401-001989	C-AL;4.7uF,20%,50V,BP,TP,5x11,5	
CUD24	2301-000204	C-FILM,PEF;2.7NF,5%,50V,7.4X3.	
CUD25	2301-000356	C-FILM,PEF;47nF,5%,50V,TP,7.5x4.0x6.5,5m	
CUD28	2401-001989	C-AL;4.7uF,20%,50V,BP,TP,5x11,5	
CUD29	2401-000480	C-AL;10UF,20%,50V,GP,5X11MM,5M	
CUD30	2401-000603	C-AL;1UF,20%,50V,GP,5X11MM,5MM	
⚠ CX01	2401-000480	C-AL;10UF,20%,50V,GP,5X11MM,5M	
D201	0401-000005	DIODE;1N4148TAPG	
D202	0402-000132	DIODE-RECTIFIER;1N4004,400V,1A,DO-41	
D204	0401-000005	DIODE;1N4148TAPG	
D205	0401-000005	DIODE;1N4148TAPG	
D206	0401-000005	DIODE;1N4148TAPG	
D207	0401-000005	DIODE;1N4148TAPG	
D208	0401-000005	DIODE;1N4148TAPG	
D210	0401-000005	DIODE;1N4148TAPG	
D301	0402-001105	DIODE-RECTIFIER;ERB43-04SV1,40	
D401	0402-000493	DIODE-RECTIFIER;1R5GU41,400V,1	
D402	0402-000132	DIODE-RECTIFIER;1N4004,400V,1A,DO-41	
D403	0402-000132	DIODE-RECTIFIER;1N4004,400V,1A,DO-41	
D404	0402-000540	DIODE-RECTIFIER;RU20A,600V,1.5	
D405	0402-001105	DIODE-RECTIFIER;ERB43-04SV1,40	
D503	0402-000132	DIODE-RECTIFIER;1N4004,400V,1A,DO-41	
D511	0402-001105	DIODE-RECTIFIER;ERB43-04SV1,40	
D512	0402-001105	DIODE-RECTIFIER;ERB43-04SV1,40	
D513	0402-001105	DIODE-RECTIFIER;ERB43-04SV1,40	
D601	0401-000005	DIODE;1N4148TAPG	
⚠ D801	0402-001082	DIODEBRIDGE;RBV406LFB,600V,4A	
D803	0402-000493	DIODE-RECTIFIER;1R5GU41,400V,1	
D804	0402-001105	DIODE-RECTIFIER;ERB43-04SV1,40	
D809	0402-000564	DIODE-FR;FML-G22S200V10A40NS	H/SINK
D812	0402-000231	DIODE-RECTIFIER;FMG-G26S,600V,	H/SINK
D814	0402-000213	DIODE-RECTIFIER;ERB12-06,600V,	
D825	0402-000493	DIODE-RECTIFIER;1R5GU41,400V,1	
D903	0401-000005	DIODE;1N4148TAPG	
D908	0401-000005	DIODE;1N4148TAPG	
D910	0401-000005	DIODE;1N4148TAPG	
⚠ D951	0402-000132	DIODE-RECTIFIER;1N4004,400V,1A,DO-41	
D962	0401-000005	DIODE;1N4148TAPG	
DB02	0402-001012	DIODERECTIFIER;FMP-3FU,1500V,5	
DE01	0402-001105	DIODE-RECTIFIER;ERB43-04SV1,40	
DU01	0401-000005	DIODE;1N4148TAPG	
DU02	0401-000005	DIODE;1N4148TAPG	
DU03	0401-000005	DIODE;1N4148TAPG	
⚠ DX01	0402-001105	DIODE-RECTIFIER;ERB43-04SV1,40	
DZ101	0403-000700	DIODE-ZENER;TZP33A,33V,31-35V,	
DZ210	0403-000563	DIODE-ZENER;MTZ9.1B,9.1V,8.57-	
DZ211	0403-000563	DIODE-ZENER;MTZ9.1B,9.1V,8.57-	
DZ217	0403-000563	DIODE-ZENER;MTZ9.1B,9.1V,8.57-	
DZ231	0403-000563	DIODE-ZENER;MTZ9.1B,9.1V,8.57-	
DZ250	0403-000662	DIODE-ZENER;MTZ3.0B,3.0V,3.01-	
DZ302	0403-000660	DIODE-ZENER;MTZ22A,22V,20.15-2	
DZ303	0403-000660	DIODE-ZENER;MTZ22A,22V,20.15-2	
DZ304	0403-000660	DIODE-ZENER;MTZ22A,22V,20.15-2	
DZ305	0403-000494	DIODE-ZENER;MTZ39B,39V,35.36/3	
DZ306	0403-000700	DIODE-ZENER;TZP33A,33V,31-35V,	
DZ401	0403-000300	DIODE-ZENER;MTZ8.2B,7.78-.19V,	
DZ402	0403-000355	DIODEZENER;UZ5.1BSB,4.97~5.17V,0.5UA,500	
DZ505	0403-000563	DIODE-ZENER;MTZ9.1B,9.1V,8.57-	
⚠ DZ601	0403-000563	DIODE-ZENER;MTZ9.1B,9.1V,8.57-	
DZ612	0403-000656	DIODE-ZENER;MTZ15C,15V,14.35-1	
DZ613	0403-000656	DIODE-ZENER;MTZ15C,15V,14.35-1	
DZ621	0403-000656	DIODE-ZENER;MTZ15C,15V,14.35-1	
DZ622	0403-000656	DIODE-ZENER;MTZ15C,15V,14.35-1	
DZ707	0403-000563	DIODE-ZENER;MTZ9.1B,9.1V,8.57-	
DZ708	0403-000563	DIODE-ZENER;MTZ9.1B,9.1V,8.57-	
DZ801	1405-001036	VARISTOR;430V,2500A,14x8.5mm,TP	
DZ802	1405-001036	VARISTOR;430V,2500A,14x8.5mm,TP	
DZ803	0403-000300	DIODE-ZENER;MTZ8.2B,7.78-.19V,	
DZ804	0403-000296	DIODE-ZENER;EQA02-06A/MTZ5.6B(	
DZ805	0403-000296	DIODE-ZENER;EQA02-06A/MTZ5.6B(	
DZ806	0403-000562	DIODE ZENER;MTZ7.5B,7.5V,7.07-7-45V,500M	
DZ807	0403-000297	DIODE-ZENER;EQA02-06D/MTZ6.2B(	
DZ808	0403-000296	DIODE-ZENER;EQA02-06A/MTZ5.6B(	
DZ810	0401-000005	DIODE;1N4148TAPG	
DZ864	0403-000296	DIODE-ZENER;EQA02-06A/MTZ5.6B(	
DZ901	0403-000355	DIODEZENER;UZ5.1BSB,4.97~5.17V,0.5UA,500	
DZ902	0403-000562	DIODE ZENER;MTZ7.5B,7.5V,7.07-7-45V,500M	
DZ905	0403-000297	DIODE-ZENER;EQA02-06D/MTZ6.2B(	
DZ906	0403-000297	DIODE-ZENER;EQA02-06D/MTZ6.2B(	
DZ907	0403-000297	DIODE-ZENER;EQA02-06D/MTZ6.2B(	
DZ908	0403-000297	DIODE-ZENER;EQA02-06D/MTZ6.2B(	
DZ910	0403-000297	DIODE-ZENER;EQA02-06D/MTZ6.2B(	
⚠ DZX01	0403-000667	DIODE-ZENER;MTZ6.8A,6.8V,6.29-	
⚠ F801	3601-001012	FUSE-FERRULE;250V,4A,SLOW-BLOW	
⚠ F801A	3602-000114	FUSE-HOLDER;-,-,30MOHM	
⚠ F801B	3602-000114	FUSE-HOLDER;-,-,30MOHM	
GT102	AA39-20010B	LEAD-CONNECTOR,ASSY;-,YFH800-01,500MM,1P	
IC201	1204-001170	IC-HOR./VER.PROCESSO;TDA8377A,	
IC202	1204-000506	IC-LINEAR;LA7510SIP9P	
IC301	1204-000517	IC-LINEAR;LA7845SIPVERTICALAMP	H/SINK
IC501	1201-001330	IC-VIDEO;TDA6108JF,ZSIP,9,SINGLE,-	H/SINK
IC603	1201-001308	IC-POWERAMP;7266,ZIP,15P,-,DUAL,26dB,PL	H/SINK
IC701	1204-001455	IC-VOLUME/TONECONT.;TDA7449,DIP,20P,300	
IC801	1203-001482	IC-PWMCONTROLLER;3S1265R,TO-3P,5P,210,P	H/SINK
IC802	1203-000644	IC-POSI.FIXEDREG.;7630,SIP,10P	H/SINK
⚠ IC851	0604-001038	PHOTOCOUPLER;TR,130-260%,200MW	
IC852	1203-001217	IC-POST,ADJUSTREG;431,T0-92,3P,4.58MIL,P	
IC853	1203-001225	IC-POSI.FIXEDREG.;78R09,TO-220,4P,-,PLA	
IC901	AA13-00017A	IC-MCU;-,Z9036512PSC-R4127	
IC902	1103-001106	IC-EEPROM;24C080,1028x8BIT,DIP,8P,300MIL	
ICD01	1209-001116	IC-ETC,LINEAR;CXA2104S,DIP,30P,-,PLASTI	
ICE01	1201-000191	IC;MC4558C	
ICP01	1209-000214	IC-DELAYLINE;TDA4665,DIP,16P,300MIL,PLA	
J258	2001-000780	R-CARBON;470ohm,5%,1/8W,AA,TP,1.8x3.2mm	
JA701	3722-001261	JACK-RCA;5P(5P+1P),3.2MM,NI,BLK	
L102	2701-000142	INDUCTOR-AXIAL;1UH,10%,2.5X3.4	
L103	2701-000207	INDUCTOR-AXIAL;56UH,5%,2.5X3.4	
L104	2701-000114	INDUCTOR-AXIAL;10UH,10%,2.5X3.	
L201	2701-000127	INDUCTOR-AXIAL;15UH,10%,2.5X3.	
L202	3301-000287	CORE-FERRITEBEAD;AA,3.5X1.0X6.	
L203	3301-000287	CORE-FERRITEBEAD;AA,3.5X1.0X6.	
L204	2701-000114	INDUCTOR-AXIAL;10UH,10%,2.5X3.	
L205	2701-000114	INDUCTOR-AXIAL;10UH,10%,2.5X3.	
L206	2701-000114	INDUCTOR-AXIAL;10UH,10%,2.5X3.	
L237	2701-000114	INDUCTOR-AXIAL;10UH,10%,2.5X3.	
L401B	AA27-30003P	COIL-LINERITY;-,33uH,OWA14x15,PI0.65,32x	
L404	3301-000287	CORE-FERRITEBEAD;AA,3.5X1.0X6.	
L405	2701-000142	INDUCTOR-AXIAL;1UH,10%,2.5X3.4	
L406	2901-000297	FILTER-EMI ON BOARD;-,3A,-,-,3.5x5,TP,-	

Downloaded from www.Manualslib.com manuals search engine

Loc. No.	Code No.	Description ; Specification	Remark
L602	3301-000287	CORE-FERRITEBEAD;AA,3.5X1.0X6.	
L710	2701-000114	INDUCTOR-AXIAL;10UH,10%,2.5X3.	
L802	AA29-30002F	FILTER-LINENOISE;-,6MH,2.45A,-	
L807	3301-000287	CORE-FERRITEBEAD;AA,3.5X1.0X6.	
L808	3301-001223	CORE-FERRITE BEAD;AB,-,3.5X5X0.8MM,-,TP,	
L809	3301-001223	CORE-FERRITE BEAD;AB,-,3.5X5X0.8MM,-,TP,	
L810	AA27-10002Y	COIL-CHOKE;-,100UH,K,10,700MA,	
L811	2901-000297	FILTER-EMI ON BOARD;-,3A,-,-,3.5x5,TP,-	
L812	2901-000297	FILTER-EMI ON BOARD;-,3A,-,-,3.5x5,TP,-	
L814	2901-000297	FILTER-EMI ON BOARD;-,3A,-,-,3.5x5,TP,-	
L815	3301-000287	CORE-FERRITEBEAD;AA,3.5X1.0X6.	
L816	AA27-10002Y	COIL-CHOKE;-,100UH,K,10,700MA,	
L864	3301-000287	CORE-FERRITEBEAD;AA,3.5X1.0X6.	
L901	2701-000114	INDUCTOR-AXIAL;10UH,10%,2.5X3.	
L902	2701-000114	INDUCTOR-AXIAL;10UH,10%,2.5X3.	
L903	3301-000287	CORE-FERRITEBEAD;AA,3.5X1.0X6.	
LB02	AA27-40003A	COIL-HORIZ,WIDTH;-,1mH,SB-5S 8x20,PI0.12	
LD901	AA96-30001B	ASSY-LED,GUIDE;-,AA61-50055A,D	
LE01	AA27-40003L	COIL-HORIZ,WIDTH;-,1.0mH,DR14x20,2UEW0.4	
LK803	AA29-30002F	FILTER-LINENOISE;-,6MH,2.45A,-	
LUD01	2701-000106	INDUCTOR-AXIAL;1.5uH,10%,2.8x7mm	
NT801	1404-001045	THERMISTOR NTC;4.7OHM,15%,2900K,35.0MW,T	
PUD01	1404-000208	POSISTOR;PTH631D02BF7ROM140TDE	
Q101	0501-000436	TR-SMALLSIGNAL;KTC3197,NPN,30V	
Q201	0501-000389	TRANSISTOR;KSC815-Y(TAPG)/YTAM	
Q204	0501-000283	TRANSISTOR;KSA539-Y(TAPG)/YTAM	
Q401	0502-001136	TR-POWER;KSD5703,NPN,70W,TO-3PF,ST,8-	H/SINK
Q403	0502-001007	TR-POWER;KSC2073-H2,NPN,150V,1	
Q601	0501-000389	TRANSISTOR;KSC815-Y(TAPG)/YTAM	
Q604	0501-000389	TRANSISTOR;KSC815-Y(TAPG)/YTAM	
Q901	0504-000123	TR-DIGITAL;KSR1010,NPN,300MW,1	
Q902	0501-000389	TRANSISTOR;KSC815-Y(TAPG)/YTAM	
Q951	0501-000369	TRANSISTOR;KSC2331-Y(TAPG)	
QE01	0502-000298	TR-POWER;KSD73,NPN,100V,60V,5A	H/SINK
QE02	0501-000283	TRANSISTOR;KSA539-Y(TAPG)/YTAM	
QP01	0501-000389	TRANSISTOR;KSC815-Y(TAPG)/YTAM	
QP02	0501-000389	TRANSISTOR;KSC815-Y(TAPG)/YTAM	
QU03	0504-000123	TR-DIGITAL;KSR1010,NPN,300MW,1	
QU05	0501-000283	TRANSISTOR;KSA539-Y(TAPG)/YTAM	
⚠ QX01	0501-000283	TRANSISTOR;KSA539-Y(TAPG)/YTAM	
R102	2001-000591	R-CARBON;3.3KOHM,5%,1/8W,AA,TP	
R103	2001-000660	R-CARBON;33KOHM,5%,1/8W,AA,TP,	
R104	2001-000221	R-CARBON;1.2KOHM,5%,1/8W,AA,TP	
R107	2001-000281	R-CARBON;100OHM,5%,1/8W,AA,TP,	
R108	2001-000281	R-CARBON;100OHM,5%,1/8W,AA,TP,	
R109	2001-000938	R-METAL;68ohm,5%,1/8W,AA,TP,1.8x3.2mm	
R111	2001-000793	R-CARBON;47OHM,5%,1/8W,AA,TP,1	
R112	2001-000281	R-CARBON;100OHM,5%,1/8W,AA,TP,	
R113	2001-000577	R-CARBON;2KOHM,5%,1/8W,AA,TP,1	
R114	2001-000221	R-CARBON;1.2KOHM,5%,1/8W,AA,TP	
R120	2001-000490	R-CARBON;200OHM,5%,1/8W,AA,TP,	
R200	2001-000577	R-CARBON;2KOHM,5%,1/8W,AA,TP,1	
R202	2001-000005	R-CARBON;390OHM,5%,1/8W,AA,TP,	
R204	2001-000793	R-CARBON;47OHM,5%,1/8W,AA,TP,1	
R205	2001-000325	R-CARBON;120OHM,5%,1/8W,AA,TP,	
R206	2001-000281	R-CARBON;100OHM,5%,1/8W,AA,TP,	
R207	2001-000325	R-CARBON;120OHM,5%,1/8W,AA,TP,	
R209	2001-000281	R-CARBON;100OHM,5%,1/8W,AA,TP,	
R210	2001-000281	R-CARBON;100OHM,5%,1/8W,AA,TP,	
R211	2001-000702	R-CARBON;39KOHM,5%,1/8W,AA,TP,	
R212	2001-000617	R-CARBON;3.9MOHM,5%,1/8W,AA,TP,1.8X3.2M	
R213	2001-000429	R-CARBON;1Kohm,5%,1/8W,AA,TP,1.8x3.2mm	
R214	2001-000281	R-CARBON;100OHM,5%,1/8W,AA,TP,	
R215	2001-000281	R-CARBON;100OHM,5%,1/8W,AA,TP,	
R216	2001-000281	R-CARBON;100OHM,5%,1/8W,AA,TP,	
R217	2001-001000	R-METAL;82Kohm,5%,1/8W,AA,TP,1.8x3.2mm	
R219	2001-000331	R-CARBON;12KOHM,5%,1/8W,AA,TP,	
R222	2001-000780	R-CARBON;470ohm,5%,1/8W,AA,TP,1.8x3.2mm	
R223	2001-000252	R-CARBON;1.6KOHM,5%,1/8W,AA,TP	
R224	2001-000734	R-CARBON;4.7KOHM,5%,1/8W,AA,TP	
R226	2001-000273	R-CARBON;100KOHM,5%,1/8W,AA,TP	
R228	2004-001089	R-METAL;560KOHM,5%,1/8W,AA,TP,	
R229	2001-000938	R-METAL;68ohm,5%,1/8W,AA,TP,1.8x3.2mm	
R230	2001-000591	R-CARBON;3.3KOHM,5%,1/8W,AA,TP	
R231	2001-000281	R-CARBON;100OHM,5%,1/8W,AA,TP,	
R232	2001-000440	R-CARBON;1OHM,5%,1/8W,AA,TP,1.	
R233	2001-000539	R-CARBON;24KOHM,5%,1/8W,AA,TP,	

Loc. No.	Code No.	Description ; Specification	Remark
R234	2001-000008	R-CARBON;15KOHM,5%,1/8W,AA,TP,	
R235	2004-001234	R-METAL;75KOHM,5%,1/8W,AA,TP,1	
R237	2004-001914	R-METAL;39KOHM,2%,1/8W,AA,TP,1	
R239	2001-000397	R-CARBON;180KOHM,5%,1/8W,AA,TP	
R245	2001-000273	R-CARBON;100KOHM,5%,1/8W,AA,TP	
R250	2001-000052	R-CARBON(S);3.3KOHM,5%,1/2W,AA	
R251	2001-000531	R-CARBON;240KOHM,5%,1/8W,AA,TP,1.8X3.2M	
R252	2001-001062	R-CARBON(S);10MOHM,5%,1/2W,AA,	
R253	2001-001411	R-CARBON;5.6Mohm,5%,1/8W,AA,TP,1.7x3.2m	
R260	2001-000832	R-CARBON;510OHM,5%,1/8W,AA,TP,	
R267	2001-000755	R-CARBON;430KOHM,5%,1/8W,AA,TP	
R301	2001-001049	R-CARBON(S);1.3KOHM,5%,1/2W,AB	
R302	2001-001049	R-CARBON(S);1.3KOHM,5%,1/2W,AB	
R303	2001-000016	R-CARBON(S);1OHM,5%,1/2W,AA,TP	
R304	2003-002014	R-METALOXIDE(S);0.6OHM,5%,2W,A	
R306	2003-002009	R-METALOXIDE(S);390OHM,5%,2W,A	
R309	2003-002009	R-METALOXIDE(S);390OHM,5%,2W,A	
R311	2003-002009	R-METALOXIDE(S);390OHM,5%,2W,A	
R403	2001-001114	R-CARBON(S);270OHM,5%,1/2W,AA,	
R404	2001-000019	R-CARBON(S);10ohm,5%,1/2W,AA,TP,2.4x6.4m	
R405	2003-000540	R-METALOXIDE(S);1KOHM,5%,2W,AD	
R406	2003-002008	R-METAL OXIDE(S);18KOHM,5%,2W,AF,TP,3.9X	
R407	2001-001153	R-CARBON(S);47OHM,5%,1/2W,AA,T	
R408	2004-001390	R-METAL(S);1KOHM,2%,1/2W,AA,TP	
⚠ R409	2008-001011	R-FUSIBLE(S);0.18OHM,10%,2W,AF	
⚠ R410	2008-001011	R-FUSIBLE(S);0.18OHM,10%,2W,AF	
R411	2004-002022	R-METAL,FILM;RM1/2T51K-F	
⚠ R412	2004-001967	R-METAL(S);68KOHM,1%,1/2W,AA,TP,6.5X2.5M	
R413	2003-001047	R-METAL OXIDE(S);68OHM,5%,2W,AF,TP,3.9X1	
R415	2003-002007	R-METAL OXIDE(S);4.7KOHM,5%,2W,AF,TP,3.9	
R416	2001-000613	R-CARBON;3.9KOHM,5%,1/8W,AA,TP	
⚠ R418	2008-000254	R-FUSIBLE(S);0.68OHM,5%,2W,AF,	
R419	2008-000252	R-FUSIBLE(S);0.47OHM,10%,1/2W,	
R501	2001-000490	R-CARBON;200OHM,5%,1/8W,AA,TP,	
R502	2001-000490	R-CARBON;200OHM,5%,1/8W,AA,TP,	
R503	2001-000490	R-CARBON;200OHM,5%,1/8W,AA,TP,	
R504	2001-000429	R-CARBON;1Kohm,5%,1/8W,AA,TP,1.8x3.2mm	
R505	2001-000429	R-CARBON;1Kohm,5%,1/8W,AA,TP,1.8x3.2mm	
R506	2001-000429	R-CARBON;1Kohm,5%,1/8W,AA,TP,1.8x3.2mm	
R517	2002-001009	R-COMPOSITION;2.7KOHM,10%,1/2W,AA,TP,3.7	
R518	2002-001009	R-COMPOSITION;2.7KOHM,10%,1/2W,AA,TP,3.7	
R519	2002-001009	R-COMPOSITION;2.7KOHM,10%,1/2W,AA,TP,3.7	
R520	2001-000096	R-CARBON(S);1MOHM,5%,1/2W,AA,T	
R523	2008-000299	R-FUSIBLE;RF2RT470-J	
R524	2002-001006	R-COMPOSITION;RC1/2T4.7KK/ERC-	
R525	2008-000254	R-FUSIBLE(S);0.68OHM,5%,2W,AF,	
R526	2008-000254	R-FUSIBLE(S);0.68OHM,5%,2W,AF,	
R601	2001-000429	R-CARBON;1Kohm,5%,1/8W,AA,TP,1.8x3.2mm	
R602	2001-000290	R-CARBON;10KOHM,5%,1/8W,AA,TP,	
R603	2004-000195	R-METAL;100Kohm,1%,1/8W,AA,TP,1.8x3.2m	
R606	2001-000281	R-CARBON;100OHM,5%,1/8W,AA,TP,	
R607	2001-000429	R-CARBON;1Kohm,5%,1/8W,AA,TP,1.8x3.2mm	
R608	2001-000281	R-CARBON;100OHM,5%,1/8W,AA,TP,	
R610	2001-000429	R-CARBON;1Kohm,5%,1/8W,AA,TP,1.8x3.2mm	
R617	2001-000429	R-CARBON;1Kohm,5%,1/8W,AA,TP,1.8x3.2mm	
R618	2001-000290	R-CARBON;10KOHM,5%,1/8W,AA,TP,	
R619	2001-000281	R-CARBON;100OHM,5%,1/8W,AA,TP,	
R622	2001-000429	R-CARBON;1Kohm,5%,1/8W,AA,TP,1.8x3.2mm	
R623	2001-000290	R-CARBON;10KOHM,5%,1/8W,AA,TP,	
R624	2001-000281	R-CARBON;100OHM,5%,1/8W,AA,TP,	
R707	2001-000429	R-CARBON;1Kohm,5%,1/8W,AA,TP,1.8x3.2mm	
R708	2001-000085	R-CARBON(S);100KOHM,5%,1/2W,AA	
R709	2001-000429	R-CARBON;1Kohm,5%,1/8W,AA,TP,1.8x3.2mm	
R713	2001-000577	R-CARBON;2KOHM,5%,1/8W,AA,TP,1	
R714	2001-000577	R-CARBON;2KOHM,5%,1/8W,AA,TP,1	
R715	2001-001187	R-CARBON(S);75OHM,5%,1/2W,AA,T	
R719	2001-000281	R-CARBON;100OHM,5%,1/8W,AA,TP,	
R720	2001-000281	R-CARBON;100OHM,5%,1/8W,AA,TP,	
R802	2001-001150	R-CARBON(S);470KOHM,5%,1/2W,AA	
R803	2003-000994	R-METALOXIDE(S);33KOHM,5%,2W,AF,TP,3.9X1	
R804	2003-000994	R-METALOXIDE(S);33KOHM,5%,2W,AF,TP,3.9X1	
⚠ R805	2002-001013	R-COMPOSITION;4.7MOHM,10%,1/2W,AA,TP,3.7	
R806	2001-001071	R-CARBON(S);12KOHM,5%,1/2W,AA,	
R807	2001-001071	R-CARBON(S);12KOHM,5%,1/2W,AA,	
R808	2004-001891	R-METAL(S);133KOHM,1%,1/2W,AA,	
R810	2001-001150	R-CARBON(S);470KOHM,5%,1/2W,AA	
R811	2001-001153	R-CARBON(S);47OHM,5%,1/2W,AA,T	

Downloaded from www.Manualslib.com manuals search engine

Loc. No.	Code No.	Description ; Specification	Remark
R814	2001-001050	R-CARBON(S);1.5KOHM,5%,1/2W,AA	
R819	2001-001178	R-CARBON(S);680OHM,5%,1/2W,AA,	
R820	2003-001047	R-METAL OXIDE(S);68OHM,5%,2W,AF,TP,3.9X1	
R822	2001-000273	R-CARBON;100KOHM,5%,1/8W,AA,TP	
R826	2001-001125	R-CARBON(S);300KOHM,5%,1/2W,AA	
R827	2001-001093	R-CARBON(S);2.2KOHM,5%,1/2W,AA	
R828	2004-001983	R-METAL;2.49KOHM,1%,1/2W,AA,TP,2.4X6.4	
R830	2008-001011	R-FUSIBLE(S);0.18OHM,10%,2W,AF	
R831	2008-001011	R-FUSIBLE(S);0.18OHM,10%,2W,AF	
R832	2003-000458	R-METALOXIDE(S);100OHM,5%,2W,A	
R833	2003-001035	R-METALOXIDE(S);27OHM,5%,2W,AF	
R836	2008-000266	R-FUSIBLE(S);1OHM,5%,2W,AF,TP,	
R861	2008-001033	R-FUSIBLE(S);10OHM,5%,2W,AF,TP	
R862	2008-001033	R-FUSIBLE(S);10OHM,5%,2W,AF,TP	
R901	2001-000793	R-CARBON;47OHM,5%,1/8W,AA,TP,1	
R902	2001-000429	R-CARBON;1Kohm,5%,1/8W,AA,TP,1.8x3.2mm	
R903	2001-000281	R-CARBON;100OHM,5%,1/8W,AA,TP,	
R904	2001-000281	R-CARBON;100OHM,5%,1/8W,AA,TP,	
R905	2001-000290	R-CARBON;10KOHM,5%,1/8W,AA,TP,	
R906	2001-000472	R-CARBON;2.7KOHM,5%,1/8W,AA,TP	
R907	2001-000995	R-CARBON;820OHM,5%,1/8W,AA,TP,	
R908	2001-000232	R-CARBON;1.3KOHM,5%,1/8W,AA,TP	
R909	2001-000449	R-CARBON;2.2KOHM,5%,1/8W,AA,TP	
R911	2001-000290	R-CARBON;10KOHM,5%,1/8W,AA,TP,	
R912	2001-000832	R-CARBON;510OHM,5%,1/8W,AA,TP,	
R914	2001-000490	R-CARBON;200OHM,5%,1/8W,AA,TP,	
R915	2001-000241	R-CARBON;1.5KOHM,5%,1/8W,AA,TP	
R918	2001-000429	R-CARBON;1Kohm,5%,1/8W,AA,TP,1.8x3.2mm	
R920	2001-000734	R-CARBON;4.7KOHM,5%,1/8W,AA,TP	
R921	2001-001062	R-CARBON(S);10MOHM,5%,1/2W,AA,	
R922	2701-000114	INDUCTOR-AXIAL;10UH,10%,2.5X3.	
R923	2701-000114	INDUCTOR-AXIAL;10UH,10%,2.5X3.	
R924	2001-000449	R-CARBON;2.2KOHM,5%,1/8W,AA,TP	
R925	2001-000449	R-CARBON;2.2KOHM,5%,1/8W,AA,TP	
R926	2001-000449	R-CARBON;2.2KOHM,5%,1/8W,AA,TP	
R927	2001-000290	R-CARBON;10KOHM,5%,1/8W,AA,TP,	
R928	2004-001234	R-METAL;75KOHM,5%,1/8W,AA,TP,1	
R930	2001-000832	R-CARBON;510OHM,5%,1/8W,AA,TP,	
R931	2001-000010	R-CARBON;68Kohm,5%,1/8W,AA,TP,1.8x3.2mm	
R932	2001-001062	R-CARBON(S);10MOHM,5%,1/2W,AA,	
R935	2001-000832	R-CARBON;510OHM,5%,1/8W,AA,TP,	
R951	2001-000290	R-CARBON;10KOHM,5%,1/8W,AA,TP,	
R952	2001-000472	R-CARBON;2.7KOHM,5%,1/8W,AA,TP	
R953	2001-000947	R-CARBON;7.5KOHM,5%,1/8W,AA,TP	
R956	2001-000290	R-CARBON;10KOHM,5%,1/8W,AA,TP,	
R957	2001-000117	R-CARBON(S);68ohm,5%,1/2W,AA,TP,2.4x6.4m	
R958	2001-000241	R-CARBON;1.5KOHM,5%,1/8W,AA,TP	
R959	2001-000734	R-CARBON;4.7KOHM,5%,1/8W,AA,TP	
R961	2001-000766	R-CARBON;43KOHM,5%,1/8W,AA,TP,	
R962	2001-000290	R-CARBON;10KOHM,5%,1/8W,AA,TP,	
R964	2004-001390	R-METAL(S);1KOHM,2%,1/2W,AA,TP	
R965	2001-000273	R-CARBON;100KOHM,5%,1/8W,AA,TP	
R966	2001-000290	R-CARBON;10KOHM,5%,1/8W,AA,TP,	
R967	2001-000429	R-CARBON;1Kohm,5%,1/8W,AA,TP,1.8x3.2mm	
RA03	2003-002102	R-METAL OXIDE;68Kohm,5%,2W,AF,TP,4x12mm	
RA04	2003-002102	R-METAL OXIDE;68Kohm,5%,2W,AF,TP,4x12mm	
RE01	2001-000429	R-CARBON;1Kohm,5%,1/8W,AA,TP,1.8x3.2mm	
RE02	2001-000837	R-CARBON;51KOHM,5%,1/8W,AA,TP,	
RE03	2001-000290	R-CARBON;10KOHM,5%,1/8W,AA,TP,	
RE04	2001-000591	R-CARBON;3.3KOHM,5%,1/8W,AA,TP	
RE05	2008-001018	R-FUSIBLE(S);0.47OHM,10%,2W,AF	
RE06	2001-000734	R-CARBON;4.7KOHM,5%,1/8W,AA,TP	
RE07	2003-002069	R-METALOXIDE;470OHM,5%,2W,AF,T	
RE08	2001-001120	R-CARBON(S);3.3OHM,5%,1/2W,AA,	
RE09	2001-000531	R-CARBON;240KOHM,5%,1/8W,AA,TP,1.8X3.2M	
RE10	2001-000531	R-CARBON;240KOHM,5%,1/8W,AA,TP,1.8X3.2M	
RE11	2001-000734	R-CARBON;4.7KOHM,5%,1/8W,AA,TP	
RL801	3501-001040	RELAYPOWER;12VDC,500MW,10A,1FO	
RM901	AA59-60001U	MODULE-REMOCON;-,ORC-50VF,38KH	
RN01	2001-000995	R-CARBON;820OHM,5%,1/8W,AA,TP,	
RP01	2001-000429	R-CARBON;1Kohm,5%,1/8W,AA,TP,1.8x3.2mm	
RP02	2001-000429	R-CARBON;1Kohm,5%,1/8W,AA,TP,1.8x3.2mm	
RP03	2001-000429	R-CARBON;1Kohm,5%,1/8W,AA,TP,1.8x3.2mm	
RP04	2001-000429	R-CARBON;1Kohm,5%,1/8W,AA,TP,1.8x3.2mm	
RS02	2001-001187	R-CARBON(S);75OHM,5%,1/2W,AA,T	
RS03	2001-001187	R-CARBON(S);75OHM,5%,1/2W,AA,T	
⚠RU01	2002-001010	R-COMPOSITION;1.8MOHM,10%,1/2W,AA,TP,3	

Loc. No.	Code No.	Description ; Specification	Remark
RU03	2001-000290	R-CARBON;10KOHM,5%,1/8W,AA,TP,	
RU04	2001-000577	R-CARBON;2KOHM,5%,1/8W,AA,TP,1	
RU05	2001-000577	R-CARBON;2KOHM,5%,1/8W,AA,TP,1	
RU06	2001-000577	R-CARBON;2KOHM,5%,1/8W,AA,TP,1	
RU07	2001-000429	R-CARBON;1Kohm,5%,1/8W,AA,TP,1.8x3.2mm	
RU08	2001-000005	R-CARBON;390OHM,5%,1/8W,AA,TP,	
RU09	2001-000005	R-CARBON;390OHM,5%,1/8W,AA,TP,	
RU10	2001-000005	R-CARBON;390OHM,5%,1/8W,AA,TP,	
RU12	2001-000290	R-CARBON;10KOHM,5%,1/8W,AA,TP,	
RU13	2001-000613	R-CARBON;3.9KOHM,5%,1/8W,AA,TP	
RU14	2004-001989	R-METAL;620OHM,5%,1/8W,AA,TP,1	
RU15	2004-001989	R-METAL;620OHM,5%,1/8W,AA,TP,1	
RU16	2004-001989	R-METAL;620OHM,5%,1/8W,AA,TP,1	
RU17	2001-000429	R-CARBON;1Kohm,5%,1/8W,AA,TP,1.8x3.2mm	
RU18	2001-000429	R-CARBON;1Kohm,5%,1/8W,AA,TP,1.8x3.2mm	
RU19	2001-000429	R-CARBON;1Kohm,5%,1/8W,AA,TP,1.8x3.2mm	
RU20	2001-000429	R-CARBON;1Kohm,5%,1/8W,AA,TP,1.8x3.2mm	
RUD03	2001-000281	R-CARBON;100OHM,5%,1/8W,AA,TP,	
RUD04	2001-000281	R-CARBON;100OHM,5%,1/8W,AA,TP,	
RUD08	2001-000435	R-CARBON;1MOHM,5%,1/8W,AA,TP,1	
RUD09	2001-000273	R-CARBON;100KOHM,5%,1/8W,AA,TP	
RUD13	2004-001165	R-METAL;62Kohm,1%,1/8W,AA,TP,1.8x3.2mm	
RUD24	2001-000591	R-CARBON;3.3KOHM,5%,1/8W,AA,TP	
RUD25	2001-000007	R-CARBON;3KOHM,5%,1/8W,AA,TP,1	
RUD30	2001-000613	R-CARBON;3.9KOHM,5%,1/8W,AA,TP	
RUD40	2001-000429	R-CARBON;1Kohm,5%,1/8W,AA,TP,1.8x3.2mm	
RUD41	2001-000947	R-CARBON;7.5KOHM,5%,1/8W,AA,TP	
RUD42	2001-000429	R-CARBON;1Kohm,5%,1/8W,AA,TP,1.8x3.2mm	
RUD43	2001-000947	R-CARBON;7.5KOHM,5%,1/8W,AA,TP	
⚠RX01	2001-001000	R-METAL;82Kohm,5%,1/8W,AA,TP,1.8x3.2mm	
⚠RX02	2001-000522	R-CARBON;22KOHM,5%,1/8W,AA,TP,	
⚠RX03	2001-000522	R-CARBON;22KOHM,5%,1/8W,AA,TP,	
⚠RX04	2001-000766	R-CARBON;43KOHM,5%,1/8W,AA,TP,	
⚠RX05	2001-000977	R-CARBON;8.2Kohm,5%,1/8W,AA,TP,1.8x3.2m	
SF101	2904-000287	FILTER-SAW AV;45.75MHz,SIP5P,ST,12.5dB,	
SF102	2904-000289	FILTER-SAWAV;45.75MHZ,SIP5P,ST	
SW901	3404-000244	SWITCH-TACT;15V,20MA,90-170GF,	
SW902	3404-000244	SWITCH-TACT;15V,20MA,90-170GF,	
SW903	3404-000244	SWITCH-TACT;15V,20MA,90-170GF,	
SW904	3404-000244	SWITCH-TACT;15V,20MA,90-170GF,	
SW905	3404-000244	SWITCH-TACT;15V,20MA,90-170GF,	
SWN01	3404-001004	SWITCH TACT;12V,50MA,160GF8.4X22.7MM	
T201	AA26-10005E	TRANS-IF;-,7MM,IF,0.136UH,7MM,	
⚠T401	AA26-50001R	TRANS HORIZ DRIVE;80MH,580UH,4UH,G11AEI1	
⚠T444	AA26-30005T	TRANS-FLYBACK;-,FUH-29A002,29,130V	
⚠T801	AA26-20007Z	TRANS-SWITCHING;-,90~260,130/15.5/12/8V,	
⚠TU01	AA40-10006U	TUNER-F/S;TECC1070PG31A(S)	
⚠V999	3704-000114	SOCKET CRT;14P,29.1,35.5SN,1SH09S/BK	
X202	2801-003298	CRYSTAL-UNIT;3.579545MHZ,30PPM	
X901	2801-003224	CRYSTAL-UNIT;32.768KHZ,20PPM,2	
Z201	2903-001022	FILTER-CERAMIC;TR,4.5MHZ	
Z601	2903-000135	FILTER-CERAMIC;BP,4.5MHZ	

ASSY-ACCESSORY

I/B	AA68-00057A	MANUAL-USERS;K51A,ENG,-,B5,W/P 100(G),'Ì	SEA
	AA68-00057B	MANUAL-USERS;K51A,ENG2~1µµ,B5,W/P	SECA
	AA68-11371A	MANUAL-USERS;K51A,FRE,TM58,B5,W/P 100(G)	SECA

ASSY-CRT

A/CRTP	AA94-50018L	ASSY-CRT;TXH2879,KCT57A,ITC
⚠CRT	AA03-10026R	CRT-COLOR;A70QBZ791X001,+380MG,29,100

ASSY-PCB,A/V

A/A-V	LA95-90026X	ASSY-PCB,A/V;CT-683B,KCT57A,NTSC,100
JB01	3722-001031	JACK-RCA;3P,3.6MM,#18,AU
LEAD/C	AA39-20112D	LEAD-CONNECTOR,ASSY;-,YBNH025-

REMOCON

Downloaded from www.Manualslib.com manuals search engine

Loc. No.	Code No.	Description ; Specification	Remark
RMT	AA59-10109C	REMOCON;-,TM58,SS,SZM368ET,38,-,-,L/GR	SEA
	AA59-10112H	REMOCON;DP,-,TM58,AA59-10109G,-,-,-,-,	SECA

ASSY-CABINET

A/BACK	AA90-70104B	ASSY-CABINET,(COM);CT-762B,TXH2879,SEA	SEA
	AA90-70104A	ASSY-CABINET,(COM);CT-762B,TXH2879	SECA
B/C	AA64-31183A	CABINET-BACK;HIPS VO GRAY CT-762	
AC+BC	AA65-30008A	CLAMP-CORD;-,PE,HB,BLK,-,-	
FBT	AA65-30109A	CLAMP-FBT;NYLON-66,V2,BLK,-,-,-	
DRESS	AA65-30018A	CLAMP-WIRE;-,NYLON6.6,-,-,DATL	
WIRE3	AA65-30100A	CLAMP WIRE;NYLON,66,VO,BLK	
RCA+CB	6002-000512	SCREW-TAPPING;RH,+,2,M4,L12,ZP	
CB+CF	6002-000516	SCREW-TAPPING;RH,+,2,M4,L20,ZP	
CABBAC	AA63-60002Y	SPACER-FELT;FELT,T0.5,BLK,330X	

ASSY-CABINET,FRONT

A/FRNT	AA91-10364C	ASSY-CABINET,FRONT;CT-762B,TXJ2879,SEA	SEA
	AA91-10364D	ASSY-CABINET,FRONT;CT-762B,TXJ2879,K51A	SECA
BADGE	AA64-70117B	BADGE-BRAND;AL,SS,R2000,25,SILVER CT-633	
BOSS/C	L3113-0003-011	BOSS-CABINET;HIPSVOBLKCT-5073	
CDCOIL	AA65-30004A	CLAMP-D,COIL;-,NYLON-66,V0,WHT	
DRESB	AA65-30018A	CLAMP-WIRE;-,NYLON6.6,-,-,DATL	
CWIRE	AA65-30018A	CLAMP-WIRE;-,NYLON6.6,-,-,DATL	
CLAMP	AA65-30105A	CLAMP-WIRE;NYLON 66N,VO,NTR,15MM	
D-COIL	AA27-20003V	D-COIL;8.6OHM,,40T,/L3300	
F/C	AA64-31181A	FRONT-CABINET;HIPS VO BLK CT-762	
IL	AA64-40509A	INDICATOR-LED;ACRYL CLR CT-762	
KC	AA64-10749A	KNOB-CONTROL;ABS HB GRAY G3676	
KP	AA64-10750A	KNOB-POWER;ABS HB GRAY G3676 TACT	
CRT+CF	AA60-10050R	SCREW-ASSY;WC,HH,+M5,L31.5,SWR	
AV+CF	AA60-10002A	SCREW-TAPPING;-,RH,+,M4,L12,ZP	
SPK+CF	6002-000514	SCREW-TAPPING;RH,+,2,M4,L15,ZP	
KC+CF	6002-000514	SCREW-TAPPING;RH,+,2,M4,L15,ZP	
S/GUM	AA63-60004G	SPACER-GUM,CRT;-,NTRRUBBER,T3.	
SPRING	AA61-60003A	SPRING-CS;-,-,SUS304,0.5,OD7,H16,N7,-,-	
WR	AA64-40487A	WINDOW-REMOTE;PC VIOLET CT-762	

ASSY-SPEAKER

A/SPK	AA96-40175A	ASSY-SPEAKER;-,8ohm,5W,-,-,600,800	
SPEAKER	3001-001071	SPEAKER;5W,8OHM,90DB,180HZ	
LEAD/C	AA39-20505B	LEADCONNECTOR-ASSY;-,YSH025-04,REC,4P,60	

Downloaded from www.Manualslib.com manuals search engine

MEMO

Downloaded from www.Manualslib.com manuals search engine

7. Block Diagrams

7-1 Main Block Diagram

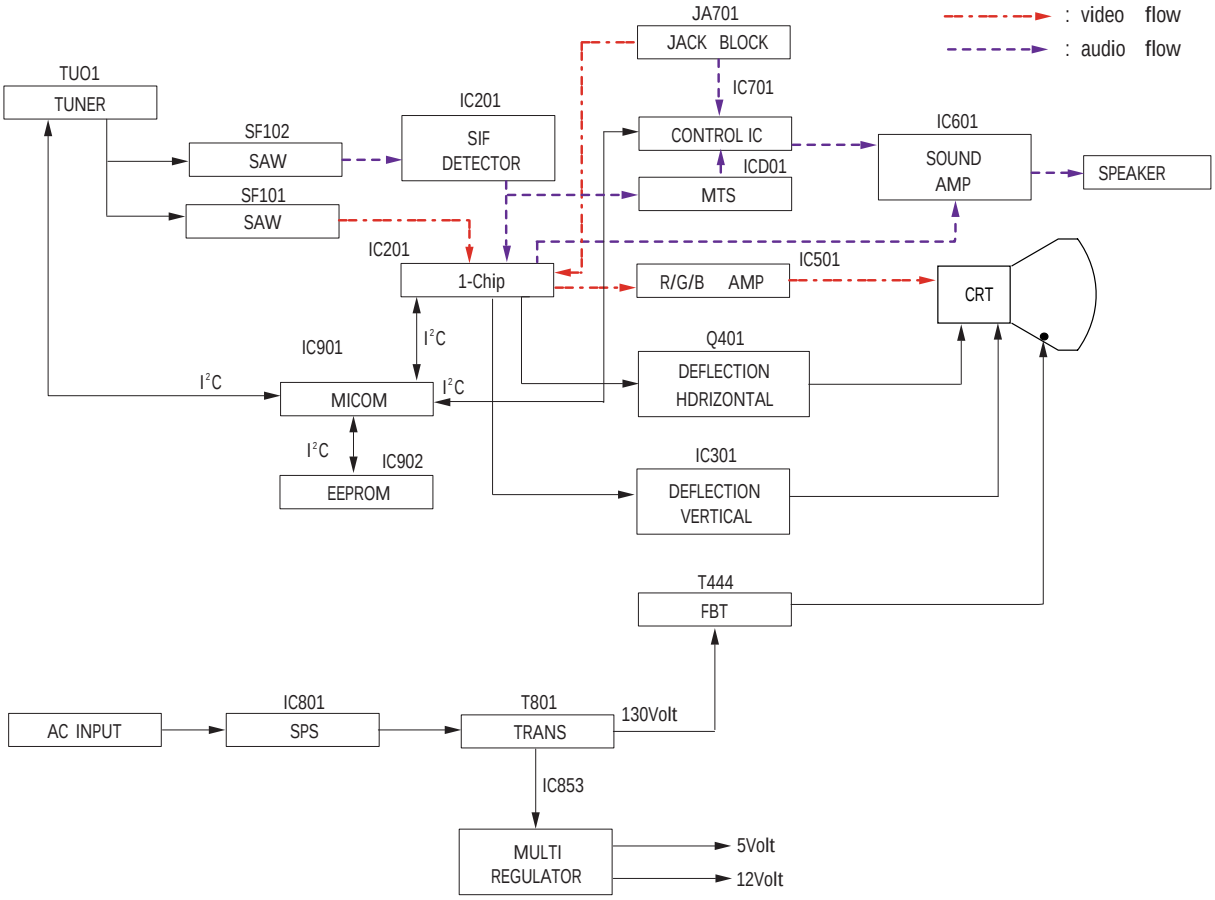

Downloaded from www.Manualslib.com manuals search engine

7-2 VIDEO SIGNAL

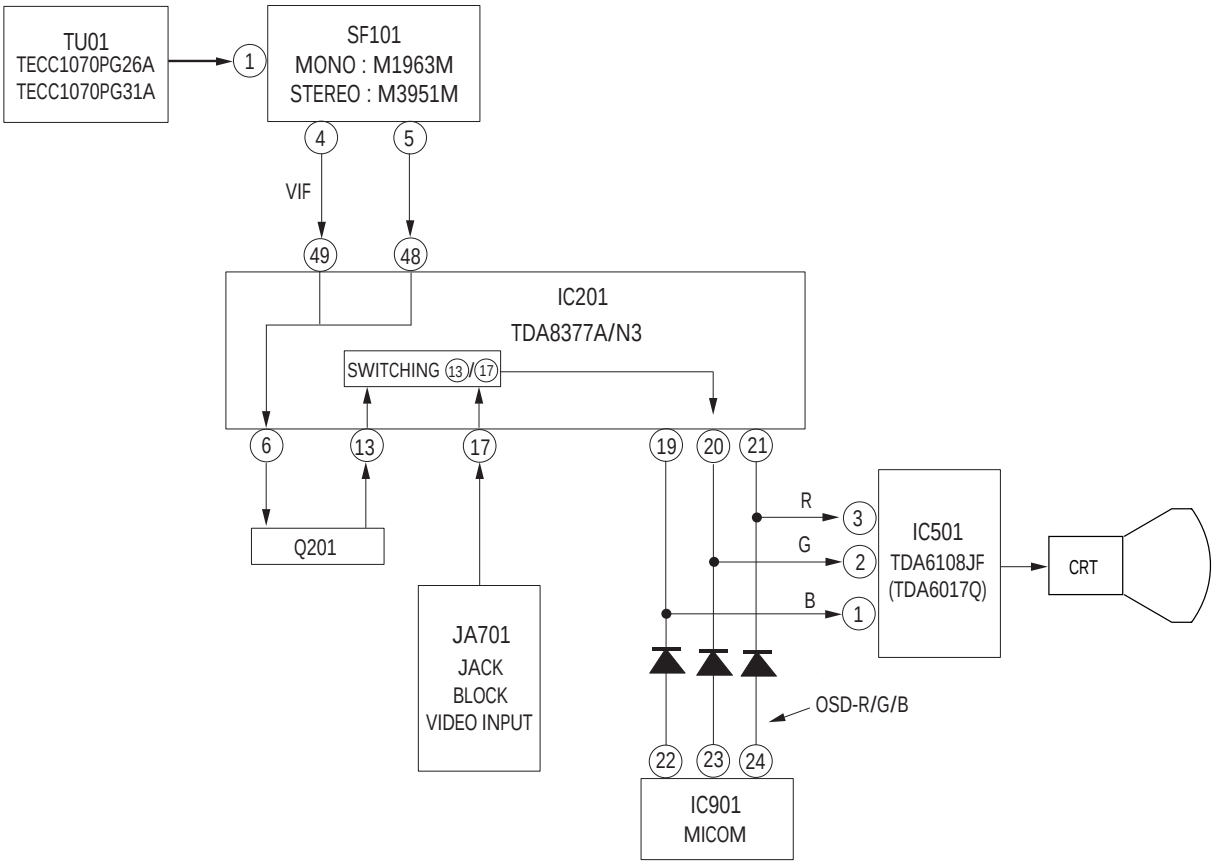

Downloaded from www.Manualslib.com manuals search engine

7-3 AUDIO SIGNAL (MONO)

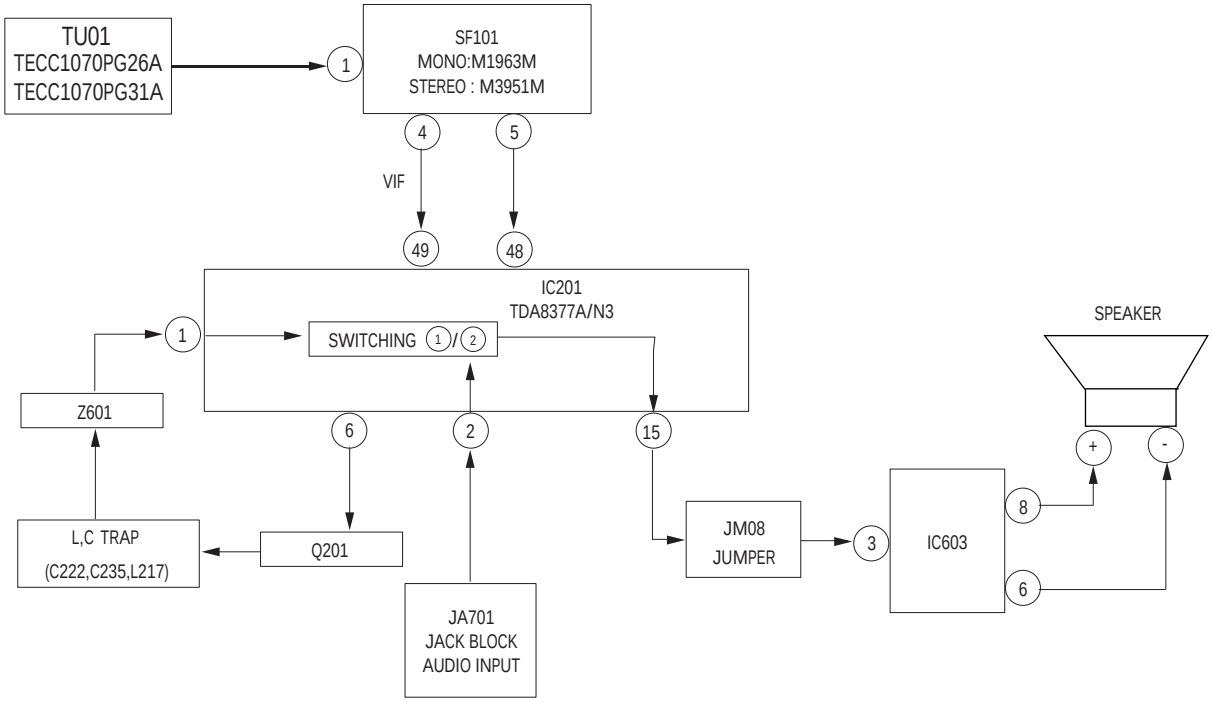

Downloaded from www.Manualslib.com manuals search engine

7-4 AUDIO SIGNAL (STEREO)

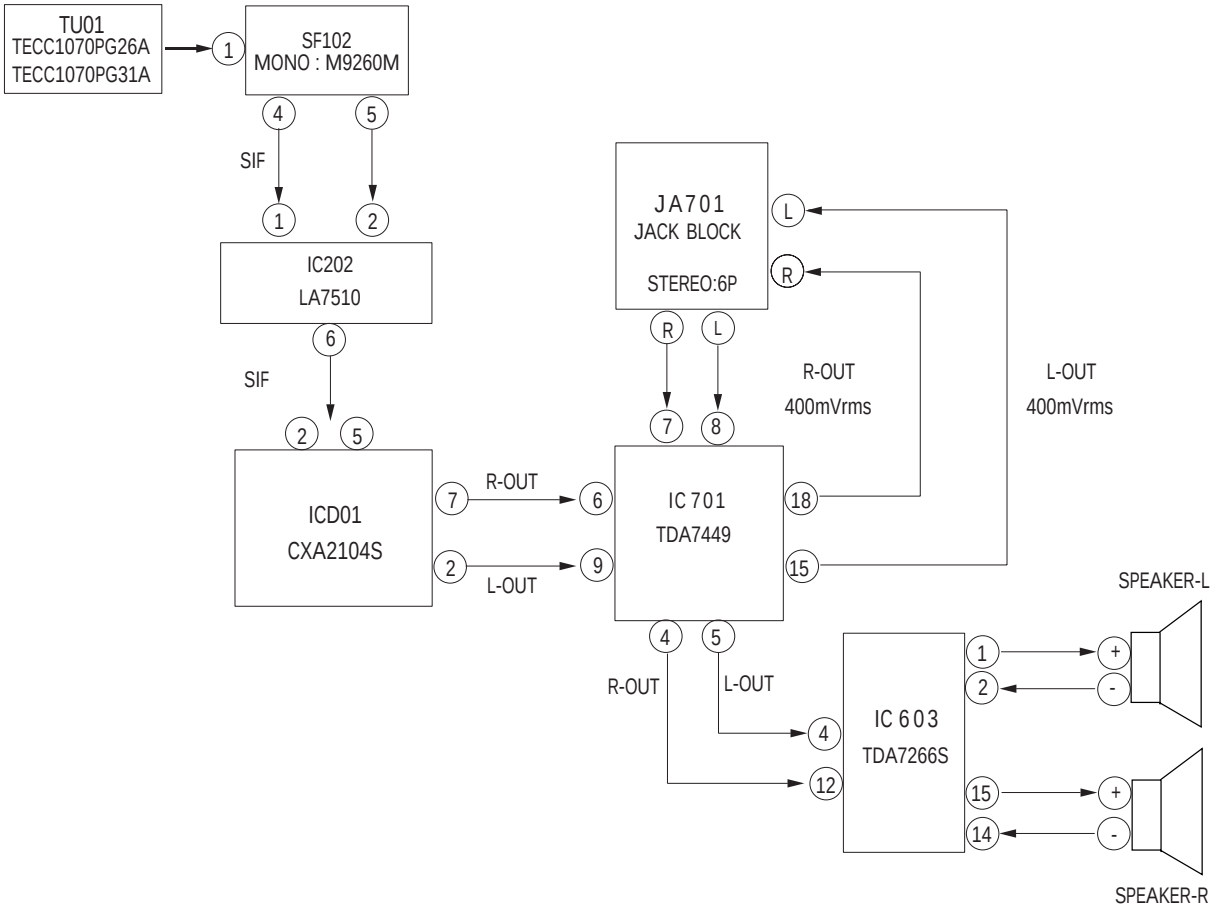

Downloaded from www.Manualslib.com manuals search engine

8. Schematic Diagrams

8-1 MAIN (1/3) MONO MODEL

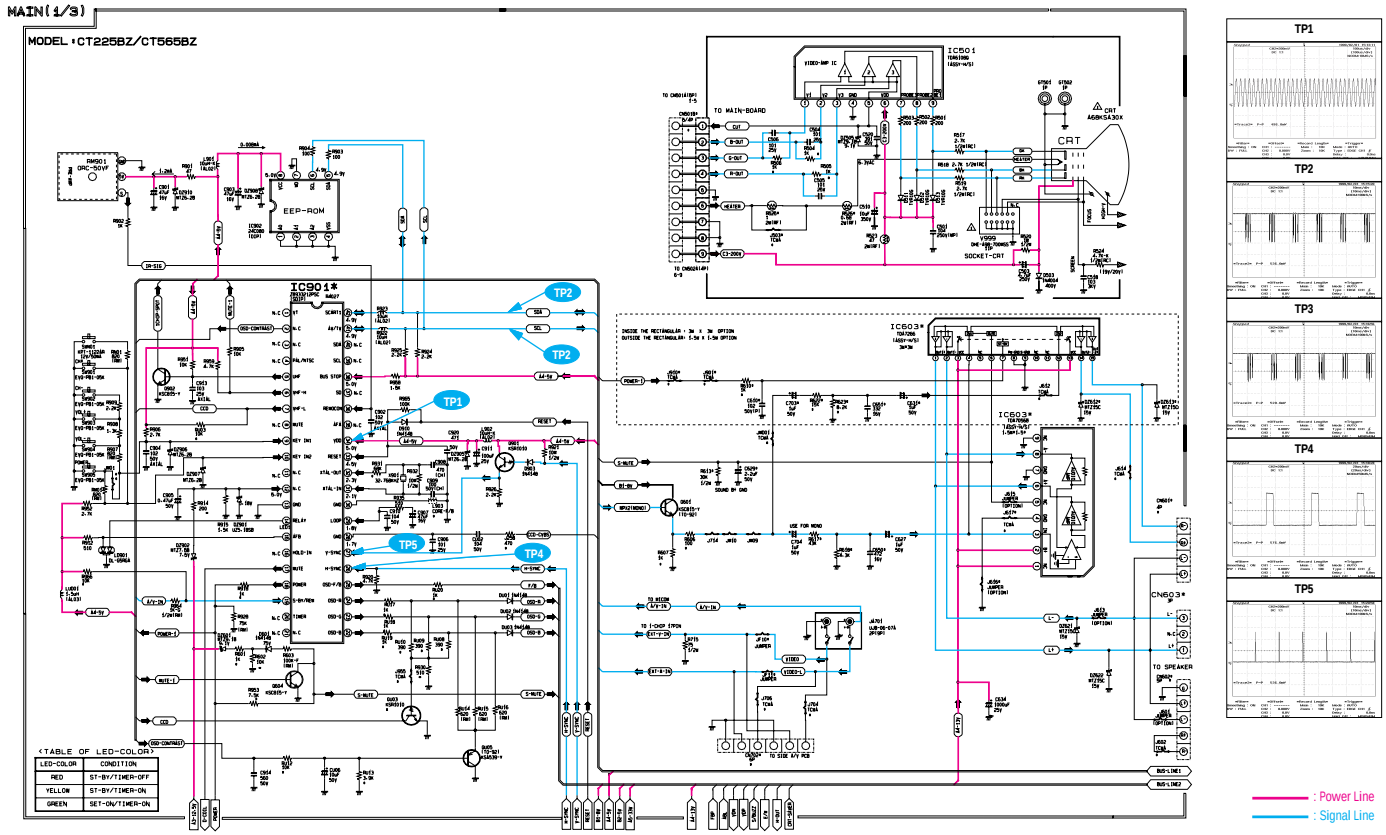

Downloaded from www.Manualslib.com manuals search engine

8-2 MAIN (2/3) MONO MODEL

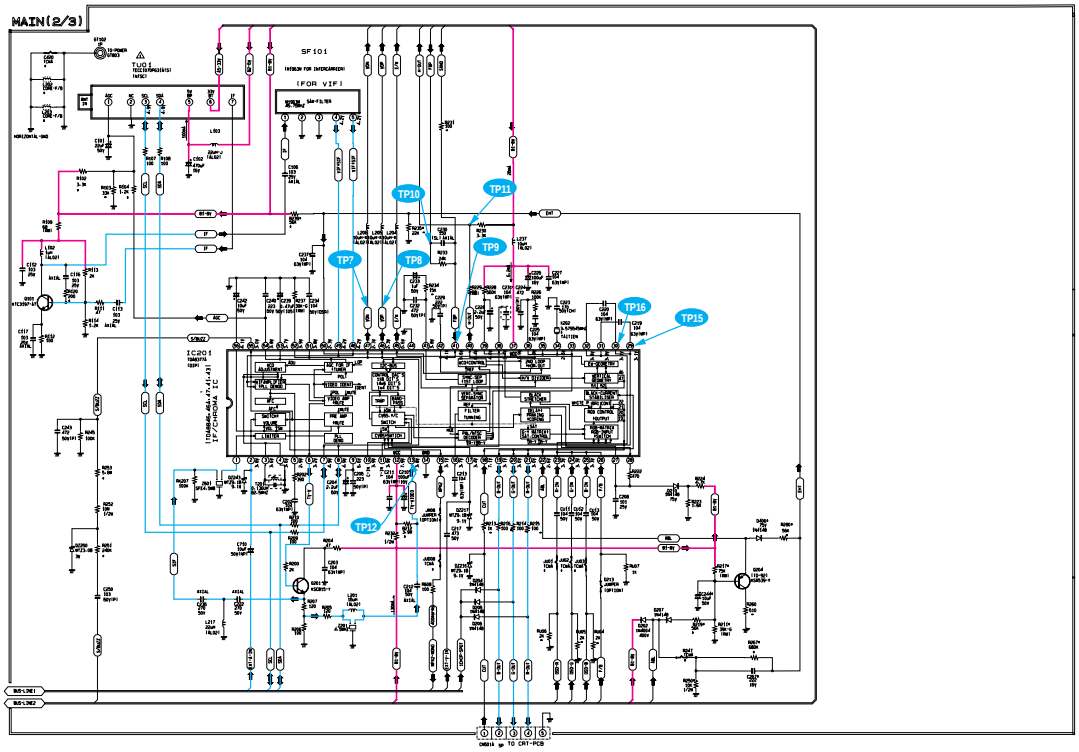

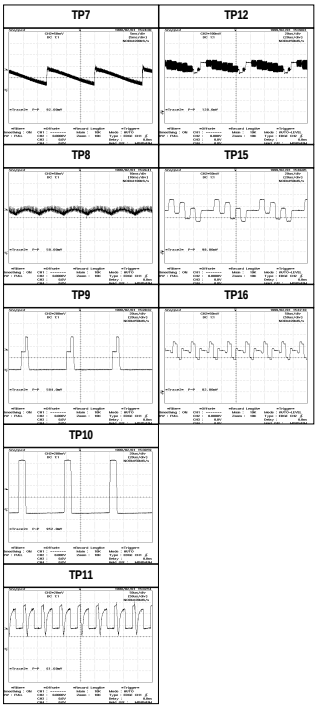

: Power Line
: Signal Line

Downloaded from www.Manualslib.com manuals search engine

8-3 MAIN (3/3) MONO MODEL

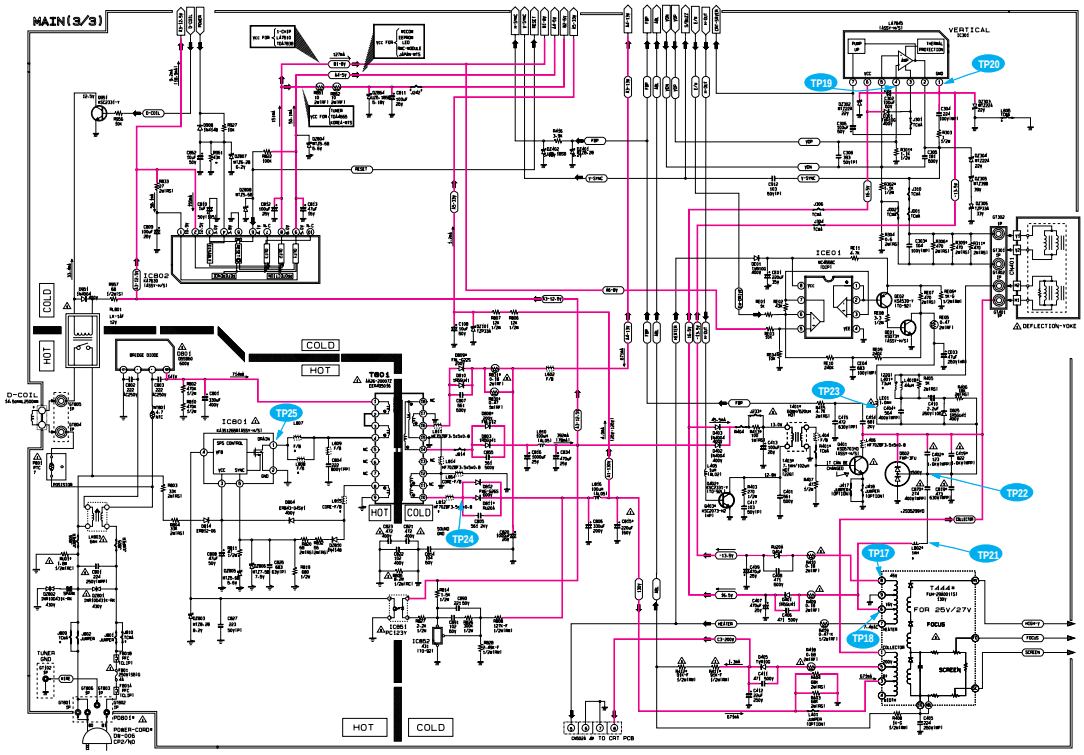

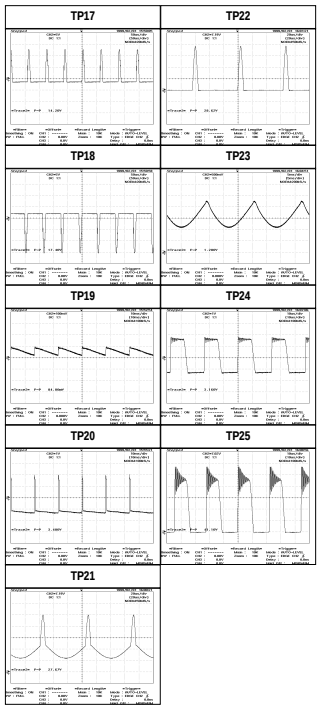

: Power Line
: Signal Line

Downloaded from www.Manualslib.com manuals search engine

8-4 MAIN (1/4) STEREO MODEL

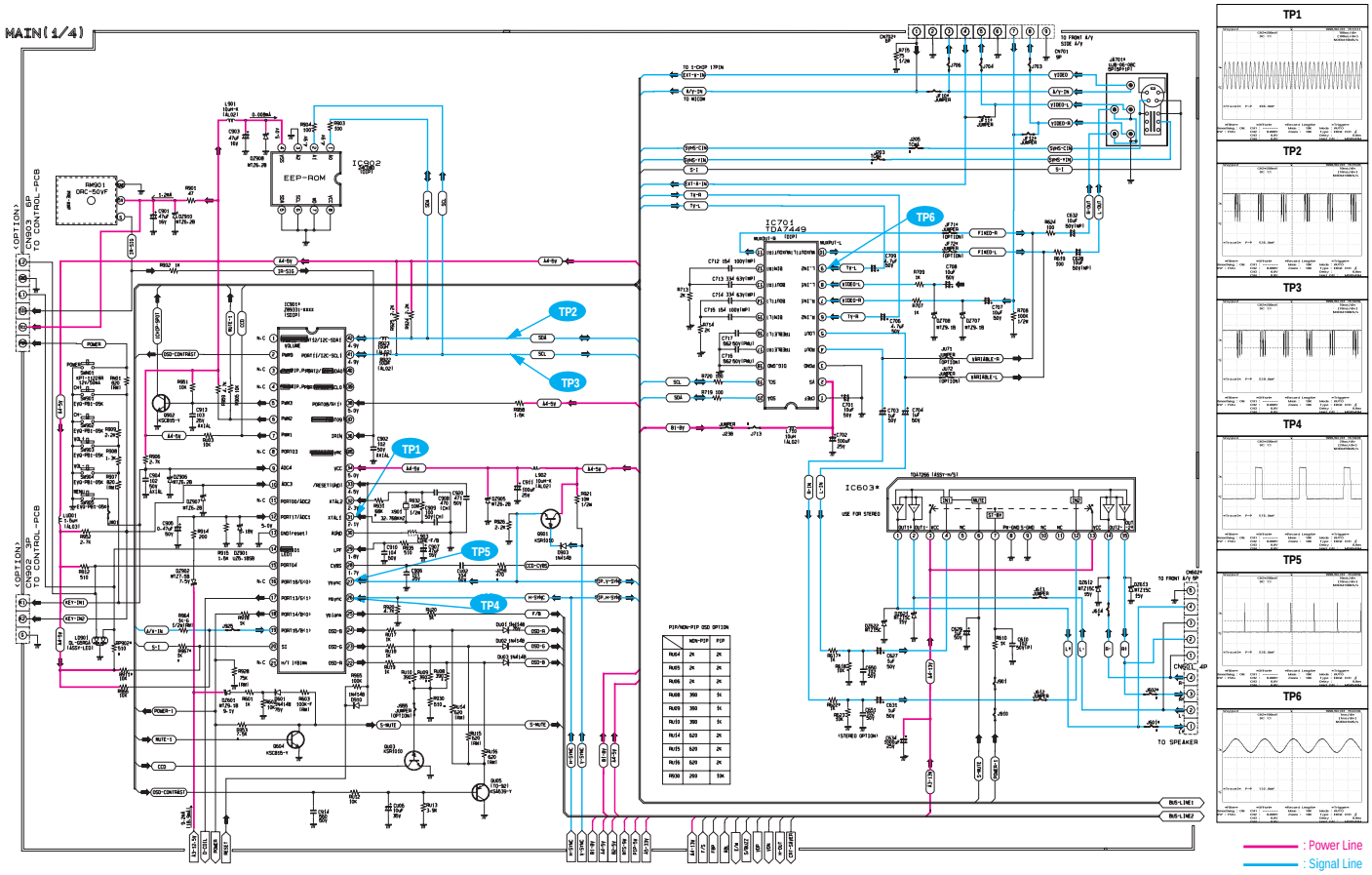

Downloaded from www.Manualslib.com manuals search engine

8-5 MAIN (2/4) STEREO MODEL

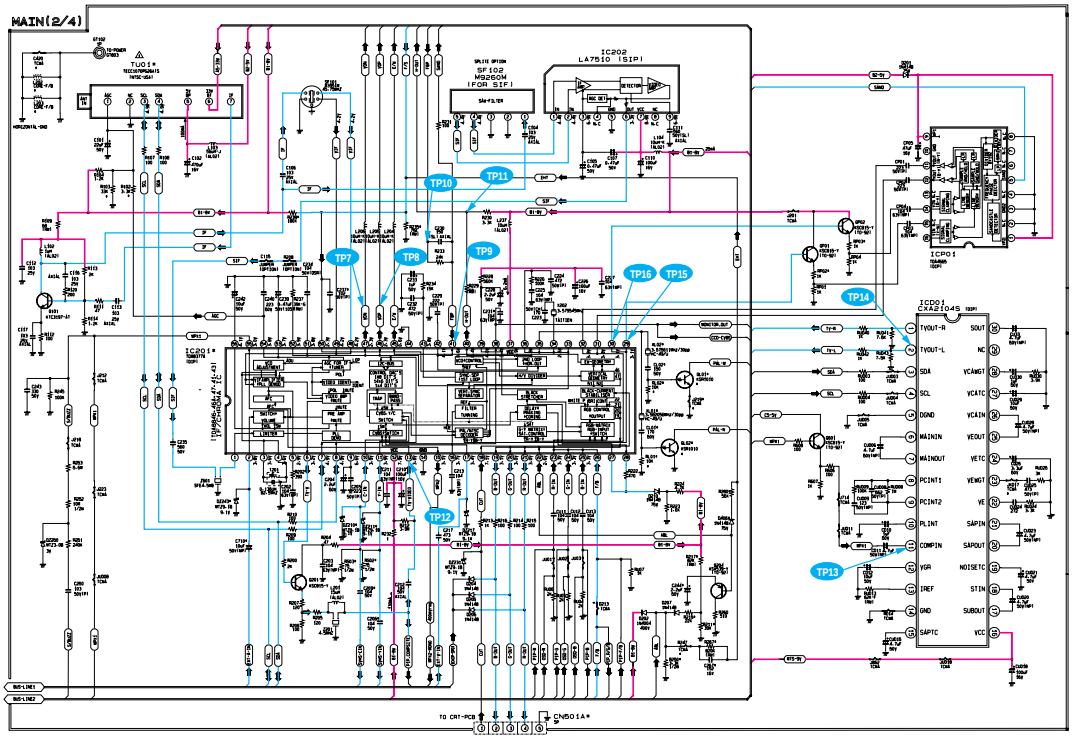

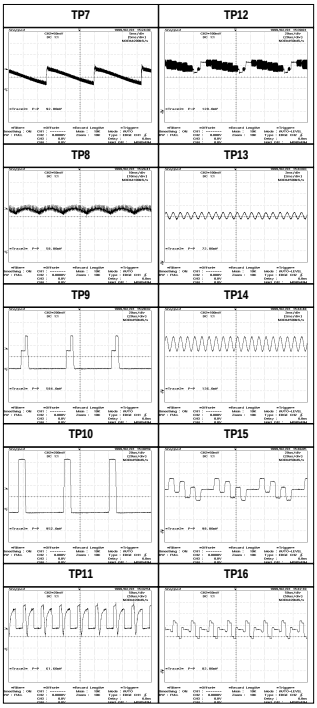

: Power Line
: Signal Line

Downloaded from www.Manualslib.com manuals search engine

8-6 MAIN (3/4) STEREO MODEL

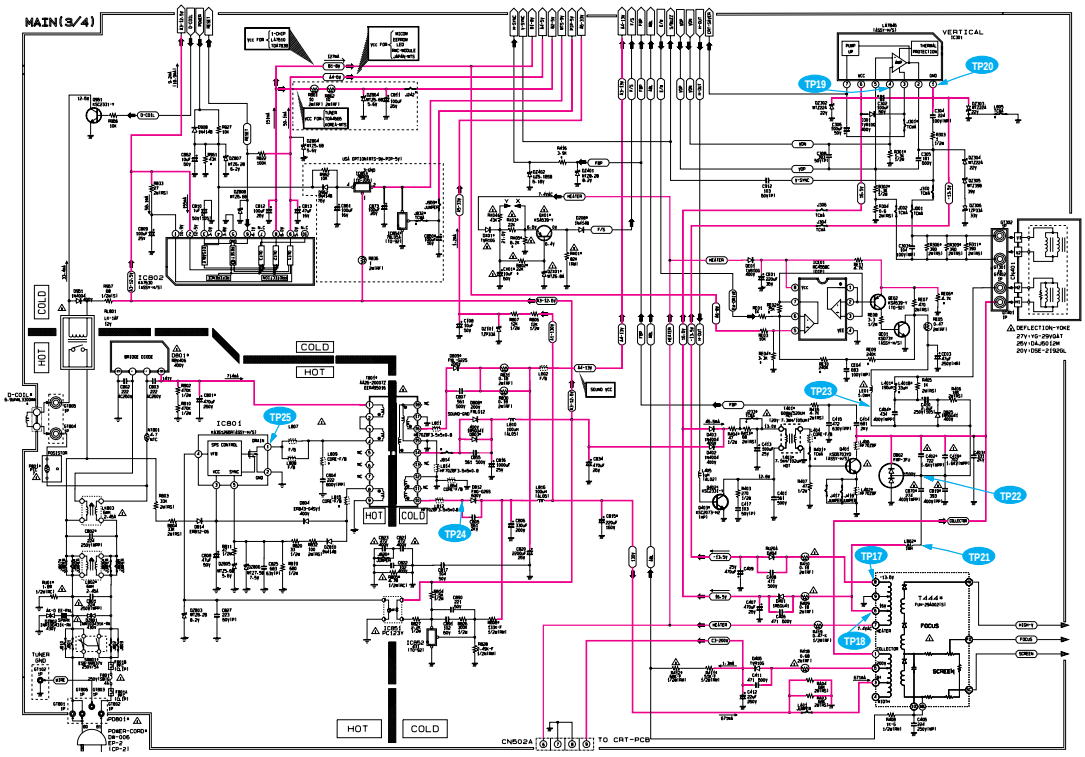

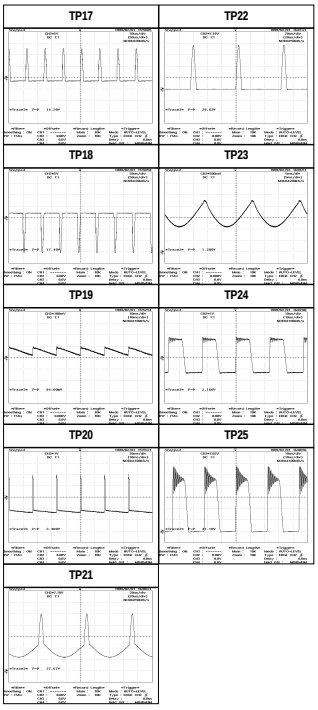

: Power Line

Downloaded from www.Manualslib.com manuals search engine

8-7 MAIN (4/4) STEREO MODEL

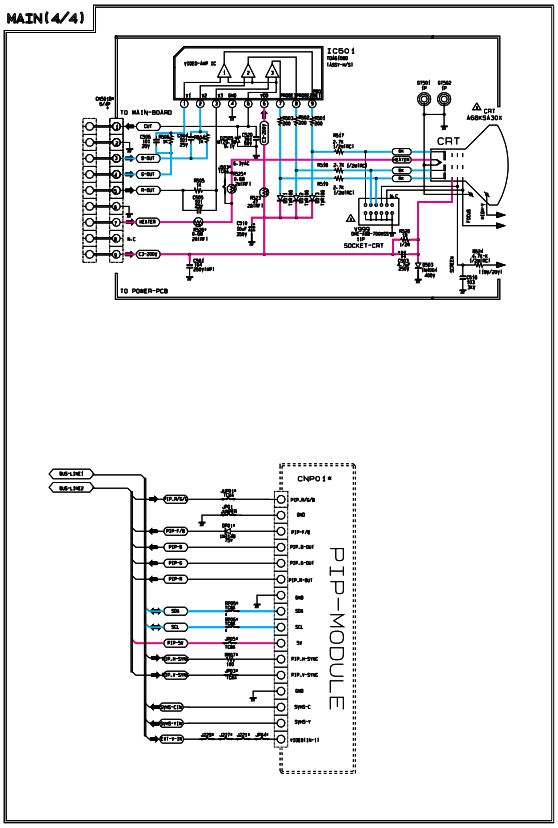

8-8 PIP

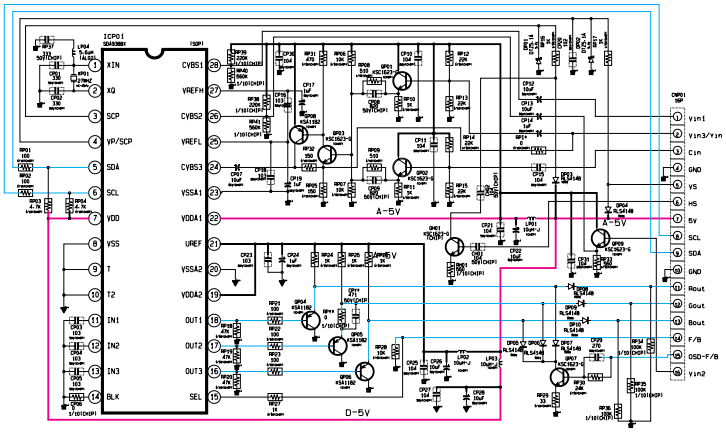

: Power Line
: Signal Line

Downloaded from www.Manualslib.com manuals search engine